Pattern Recognition of Rescue Robot of Coal Mine

C.Wei
Mechanical and Electrical Institute of Mining University of China
Jiangsu 221000, China
Zaozhuang Vocational College of Science and Technology
Shandong 277599, China
chunliweiwcl@163.com

ABSTRACT: *For the purpose of get the detection of disaster of fire and coal mine, this paper has designed a rescue robot, which including overall design of the robot, design of mechanical, and so on, in order to get the pattern recognition of the disaster, a adaptive deep belief networks has been created for visual processing, such as sample definitions, sample normalization, creation of a network model, network training, and the results test and display, as compared with the actual situation, It is prove that the pattern recognition of rescue robot is feasible.*

Keywords: Coal mine rescue robot l, The adaptive deep confidence neural network, The pattern recognition.

Received: 12 December 2016, Revised 18 January 2017, Accepted 27 January 2017

1. Introduction

As robots are widely used in modern industry, the requirement of the society for robot is more and more. With the expanding of application range of robot, new requirements of robots are put forward in some special working environment, such as bionic robot system was applied to radiation, space objects, Mars, and other special and deep seafloor extreme environment to realize automatic and on-line fault diagnosis, which for maintenance and detection [1, 2]. So far, robot technology has made great progress in many fields, since the robot working environment is more complicated, requirements for robot are different under the different environment, especially earthquake, fire, mine field [3-5], etc. it is necessary to detect the scene environment to found signals and objects that need to be rescued timely. This paper has discussed a kind of rescue robot of coal mine, which include overall design of the robot, and adaptive depth belief network is created for visual learning and training (see figure 1 and 2).

Figure 1. Battlefield rescue robot

Figure 2. Coal mine rescue robot

2. Experimental Procedure

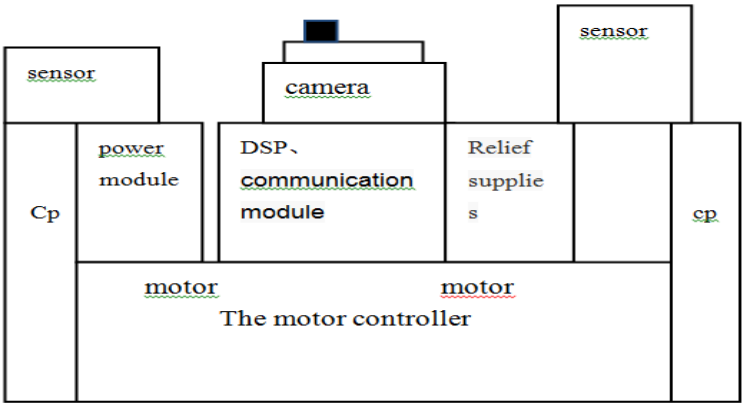

Figure 3. Rescue robot body structure

2.1 Rescue Robot Overall Scheme Design

Rescue robot including body and remote control two components [6-8], the whole body structure as shown in Figure 3, which include the main controller unit, the function of self-cleaning camera, infrared sensors, sound sensors, motor controller, servo motor, communication module; the remote control mainly includes button panel of remote control, communication module, as shown in Figure 4.

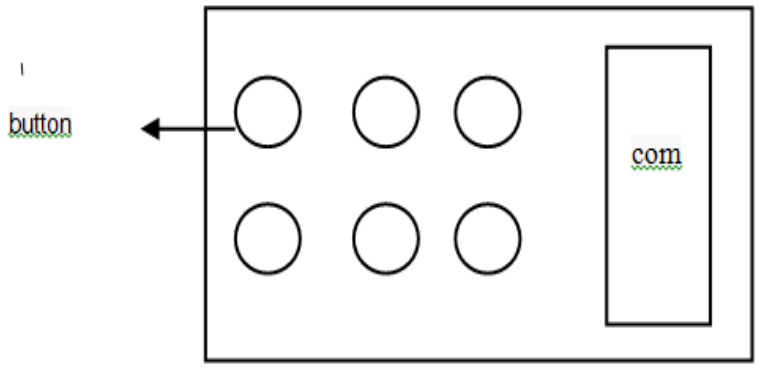

Figure 4. Rescue robot remote control structure

2.2 Mechanical Part Design

Rescue robot body 2 meters long, 0.6 meters wide, 0.5 meters high, walking both by wheel and crawler, can load 5 kg. Mechanical structure schematic diagram is shown in Figure 5.

In order to cleaning wipe ash of external layer glass, camera adopts double refractory glass encapsulation, and a miniature dc motor has installed on haeundae of the camera, as shown in Figure 5.

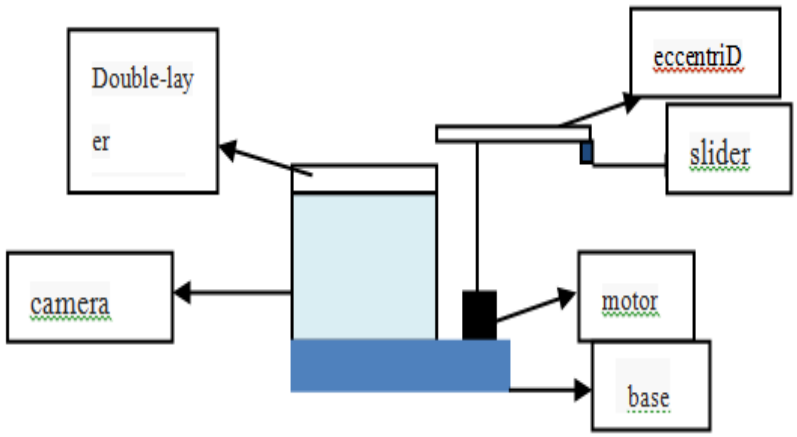

Figure 5. Cameras with self-cleaning function structure

2.3 Classifier Design

Rescue robot pattern recognition can be abstracted as a classification problem, presence of target's judgment is a binary classification problem [9-10], while the specific model types of judgment is more classification problem. the key of the correct judgment is not only to choose right characteristics to describe the working conditions about rescue robot of coal mine, but also choose the appropriate classifier to separate different types of samples. For example, feature selection, which include infrared sensor parameters, sound sensors parameters, optical camera parameters, etc.

Classifier design A depth of the adaptive belief network (ADBN) has created to complete it here, which has three features, the firstly, since the ADBN can be adjusted based on the deep structure of the method in the depth of automatic coding, thus it can be used as classification. Secondly, for unsupervised learning method, ADBN has inherited advantages of DDBN [11-12], after the hidden layer of the deep structure to build up layer by layer with RBM, EEthen use the linear RBM to build the output layer. Thirdly, for supervised learning method, deep back propagation method was used to optimize the whole index to construct based on the frame loss function.

Supervised learning problem description

Collect signal characteristic parameters of life, then a three dimensional vector X=[X1, X2, X3] can be got such as sound parameters, color and height parameters after processing of statistical. Collect L samples of each classification mode, a total is 3 E L training samples.

Since classifier map the characteristic signal for a category, for example to build the mapping function of X and Y use L training data with deep web. After the training, the deep architecture can determine labels y of the corresponding use mapping function, when a new data x input.

2.4 Neural Network Modeling

Adaptive deep belief network structure diagram as shown in Fig. 6 and Fig. 7.

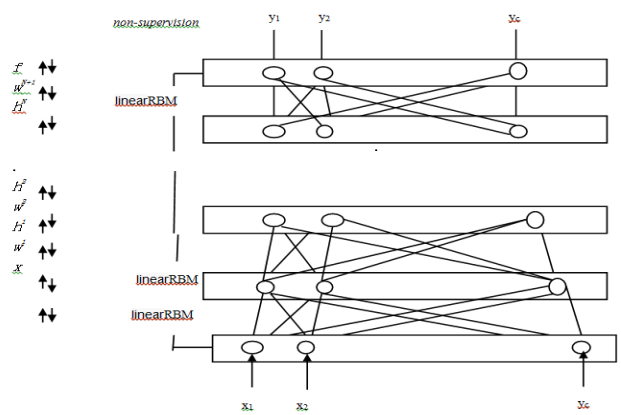

Figure 6. Adaptive deep belief network structure

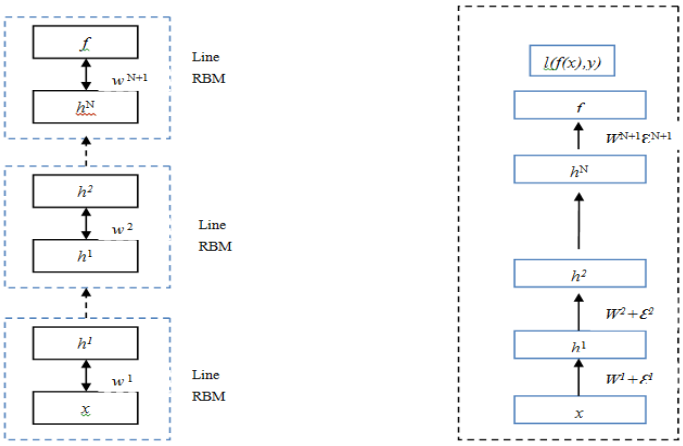

Figure 7. Adaptive deep belief network training method

2.5 Adaptive Depth Belief Network Training Method

The training sample

Part of the training samples are shown in table 1.

The sample number	Model type	Voice parameters (Hz)	Color parameters RGB	Theheight parameter cm	note
1	male	200	white FFFFFF	175	
2	female	500	yellowFFFF00	168	
3	male	600	goldenFFD700	174	
4	male	270	grayC0C0C0	178	
5	female	800	green 00FF00	162	
6	male	700	cyan 00FFFF	170	
7	male	400	brown 802A2A	173	
8	female	1000	redFF0000	165	
9	female	800	Pale green 00FF7F	160	
10	male	300	chestnutB03060	180	
11	female	1500	purpleA020F0	156	
12	male	900	orangeFF6100	171	
13	male	400	greyFFFAF0	174	
14	female	1800	rose redBC8F8F	159	
15	male	1000	pinkFFC0CB	180	

Table 1. Part of the training sample

3. Results and Discussion

3.1 The Display

ADBN classification error rate when use a different number of hidden layers, as shown in Figure 8.

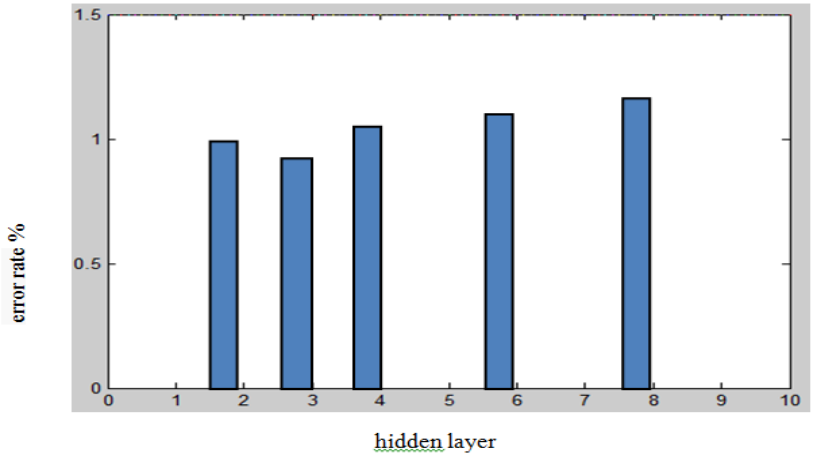

Figure 8. Numbers of hidden layers

ADBN classification error rate when use a different number of the training sample data, as shown in Figure 9.

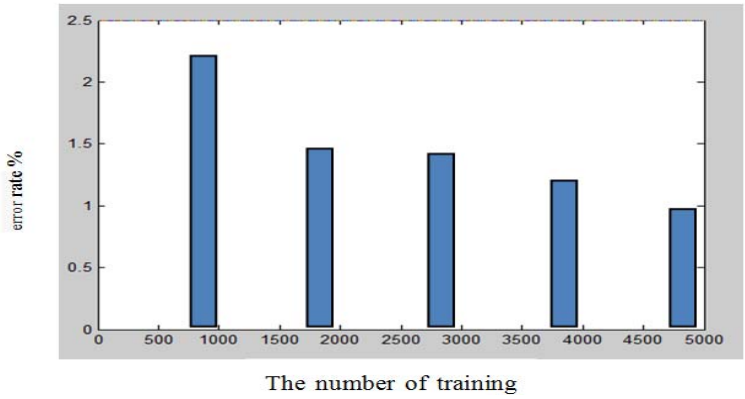

Figure 9. ADBN classification error rate when the number of training data is different

3.2 Results and Discussion

It can be seen from the Fig. 7, with the implicit layer becomes more and more, the error rate has a increase tendency. ADBN convergence is the fastest and the best performance, when ADBN using three hidden layers.

As can be seen from the Fig. 8, the classification error rate has the trend to reduce, while the training data increases, when experiment with different size of training data. ADBN get a better classifier at the training sample is 5000.

4. Conclusion

This paper has designed the overall of rescue robot of coal mine, such as mechanical design, and not only the creation of the adaptive depth belief network for deal with visual classification, but also training with different samples on the three layers of ADBN ,as a result a pattern recognition has been got with low error rate.

References

[1] Juang, CF., Chiu, S. H., Chang, SW. (2007). A self-organizing TS-Type fuzzy network with support vector learning and its application to classification problems, *IEEE Transaction on Fuzzy System*. 15 (5) 998-1008.

[2] NAbe, MKudo. (2006). Non-parametric classifier-independent feature selection. Pattern Recognition. 39 (5) 737-746

[3] Chow, TW., Huang, D. (2005). Estimating optimal feature subsets using efficient estimation of high-dimensional mutual information. *IEEE Transactions on Neural Networks.* 16 (1) 213-224.

[4] Engelbrecht, AP., Brits. R. (2001). A clustering approach to incrementa learning for feed forward neural network, *In*: Proceeding of International Joint Conference on Neural Network. 3, 2019-2024.

[5] Modrzejewski, M. (1993). Feature selection using rough sets theory. *Machine Learning*. 667. 213-226.

[6] Cottrell, G W. (2006). New Life for Neural Networks. *Science*. 313 (5786) 454-455.

[7] Bengio, Y. (2009). Learning Deep Architectues for AI. *Foundations and Trends in Machine Learning*. 2 (1) 13-15.

[8] Larochelle H, Bengio Y, Louradour J. (2009). Exploring Strategies for Training Deep Network, *Journal of Machine Learning Research.* 10. 1-10.

[9] Zhou, Z H., Li, M. (2005). Tri-Training: Exploiting Unlabeled Data Using Three Classifirs. *IEEE Transaction on Knowledde and Data Engineering*. 17 (11) 1529-1541

[10] Kraus, S., Lehmann, D., Magidor, M. (1990). Nonmonotonic reasoning, preferential models and cumulative logics. *Artificial Intelligence*. *44* (1) 167-207

[11] Weimin, Zhang. (1997). Learning resources and learning process - the major target of the study of the practice and education technology. *China audio-visual education*. (7) 58.

[12] Fuquan, Huang. (2002). Discuss about the basic strategy of information technology and curriculum integration. *Electrochemical education research*. (7) 24-29.