Performance Enhancement of OFDM Signal using PAPR Reduction Techniques-LTE System

PattetiKrishna[1], Kalithkar Kishan Rao[2], Tipparti Anil Kumar[3]
[1]Department of Electronics & Communication Engineering
SVSIT, Hanamkonda, Andhra Pradesh, India
[2]Department of Electronics & Communication Engineering
Vaagdevi College of Engineering, Warangal, Andhra Pradesh, India
[3]Department of Electronics & Communication Engineering
SR Engineering College, Warangal, Andhra Pradesh, India
{kpatteti, kishanrao6}@gmail.com, tvakumar2000@yahoo.co.in

ABSTRACT: *High Peak-to-Average Ratio of the transmitted signal is a major drawback of Orthogonal Frequency division multiple accesses (OFDMA). In this paper, we propose a Selected Mapping Technique, Partial Transmit Sequence and Discrete Fourier Transform Spreading Techniques to overcome the problem of high PAPR in Long term evaluation uplink transmitter. Performance enhancement of the OFDM signal uplink transmitter for Long-Term Evolution has been observed and its Peak to average power ratio is investigated through MATLAB simulations.*

Keywords: PAPR, OFDMA, SC-FDMA, SLM, PTS and DFT Spreading

Received: 2 January 2014, Revised 12 February 2014, Accepted 15 February 2014

1. Introduction

Long-Term Evolution (LTE) is a wireless data communications standard, proposed for high speed upcoming 4G cellular network, which aims to enhance the speed and capacity of the wireless networks using latest Digital Signal Processing techniques. Further, it reduces the transfer latency as compared to the 3G architecture by employing the redesign and simplification of the network architecture to an IP-based system [1]. OFDM increases system capacity so as to provide a reliable transmission [2]. OFDM is to split a high-rate data stream into a number of lower rate streams that are transmitted simultaneously over a number of sub carriers. These sub carriers are overlapped with each other. Because the symbol duration increases for lower rate parallel sub carriers, the relative amount of dispersion in time caused by multi path delay spread is decreased. Inter- symbol interference (ISI) is eliminated almost completely by introducing a guard time in every OFDM symbol. OFDM has been adapted to various standards, such as IEEE 802.11 wireless local area networks (WLANs), IEEE 802.16 mobile worldwide interoperability for microwave access (WiMAX), and 3GPP. On the other hand, the major drawback of OFDM signal is its large peak-to-average power ratio (PAPR), which causes poor power efficiency or serious performance degradation to transmit power amplifier. Therefore, the OFDM receiver's detection efficiency is very sensitive to the nonlinear devices used in its signal processing

loop, such as Digital-to-Analog Converter (DAC) and High Power Applier (HPA), which may severely impair system performance due to induced spectral re-growth and detection efficiency degradation. Most radio systems employ the HPA in the transmitter to obtain sufficient transmit power and HPA is usually operated at or near the saturation region to achieve the maximum output power efficiency, and thus the memory-less nonlinear distortion due to high PAPR of the input signals will be introduced into the communication channels [4]. To reduce the PAPR, many techniques have been proposed, Such as clipping, coding, partial transmit sequence (PTS), selected mapping (SLM), interleaving, nonlinear companding transforms, hadamard transforms and other techniques etc [3]. These schemes can mainly be categorized into signal scrambling techniques, such as PTS, and signal distortion techniques such as clipping, companding techniques [5]. Hence, in this paper we propose a DFT Spreading Technique and DFT-Pulse shaping reduction of PAPR for LTE systems.

2. PAPR Problem of OFDM Signal

2.1 Continuous-time PAPR

PAPR is the ratio between the maximum power and the average power of the complex pass band signal $S(t)$, that is

$$\text{PAPR}\{\tilde{S}(t)\} = \frac{max|S(t)|^2}{E\{|S(t)|^2\}} \tag{1}$$

2.2 Discrete-time PAPR

PAPR for the discrete-time base band signal $x[n]$ may not be the same as that for the continuous-time base band signal $x(t)$. In fact, the PAPR for $x[n]$ is lower than that for $x(t)$. Because $x[n]$ may not have all the peaks of $x(t)$. In practice, the PAPR for the continuous-time base band signal can be measured only after implementing the actual hardware, including digital-to-analog convertor (DAC). For better approximation the PAPR of continuous-time OFDM signals, the OFDM signals samples are obtained by L times over sampling. L time over sampled time domain samples are NL-point IFFT of the data block with $(L-1)N$ zero-padding. Therefore, the over sampled IFFT output can be expressed as

$$x[n] = \frac{1}{N}\sum_{k=0}^{N-1} X(k).\, e^{j\frac{2\pi}{N}kn} \tag{2}$$

The PAPR computed from the L-times over sampled time domain OFDM signal samples can be defined as

$$PAPR = \frac{\max\limits_{m=0,1...NL} |x(\acute{m})|^2}{E\{|\acute{x}(t)|^2\}} \tag{3}$$

Generally, the output signals after IFFT are random as the input data samples are random. The highest PAPR occurs only when n ($n < N$) modulated signals have the same phase. In this case, the peak power would be the sum of the powers of these signals. Since the PAPR is a random variable, Complementary Cumulative Distribution Function (CCDF) is the most popular way to evaluate the statistic properties of PAPR by estimating the probability of PAPR when it exceeds a certain level PAPR_0.The CCDF of the PAPR is defined as

$$\text{CCDF} = P\{\text{PAPR} > \text{PAPR}_0\} \tag{4}$$

This is the simulation of OFDM system to observe PAPR in it.

3. PAPR Reduction Techniquies

3.1 Selective Mapping

Figure 1 shows the block diagram of selective mapping (SLM) technique for PAPR reduction. Here, the input data block $X = [X[0], X[1],.....X[N-1]$ is multiplied with U different phase sequences $P^u = [P_0^u, P_1^u.....P_{N-1}^u]$ where $P_v^u = e^{j\varphi_v^u}$ and $\varphi_v^u \in (0, 2\pi)$ for $v = 0,1.....N-1$ and $u = 1, 2.....U$ which produce a modified data block $X^u = [X^u(1), X^u(2),.....X^u[N-1]^T$ among which the one $\tilde{x} = \tilde{x^u}$ with the lowest PAPR is selected for transmission is

$$\tilde{u} = \arg\min_{u=1,2...U}\left(\max_{n=0,2...N-1} |x^u[n]|\right) \tag{5}$$

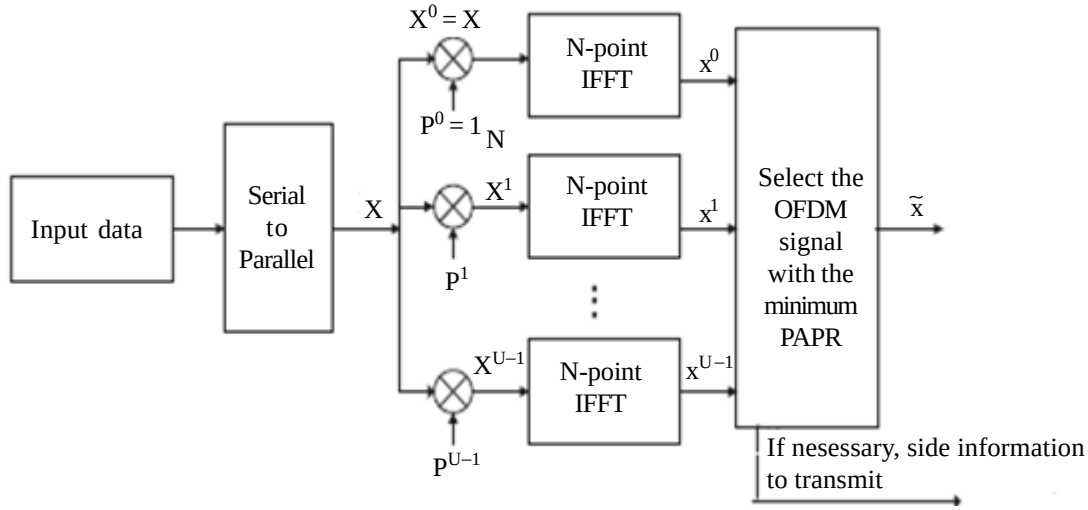

Figure 1. Block diagram of selective mapping (SLM) technique for PAPR reduction

In order for the receiver to be able to recover the original data block, the information about the selected phase sequence P_u should be transmitted as side information [5]. The implementation of SLM technique requires U IFFT operations. Furthermore, it requires [log2U] bits of side information for each data block where [x] denotes the greatest integer less than x.

3.2 Partial Transmit Sequence

The partial transmit sequence (PTS) technique partitions an input data block of N symbols into V disjoint sub blocks as follows

$$X = [X^0, X^1, ...X^{V-1}]^T$$

where X^i are the sub blocks that are consecutively located and also are of equal size. Unlike the SLM technique in which scrambling is applied to all sub carriers, scrambling (rotating its phase independently) is applied to each sub block in the PTS technique (see Figure 2). Then each partitioned sub block is multiplied by a corresponding complex phase factor $b^v = e^{j\varphi v}$ where v =1, 2…..V subsequently taking its IFFT to yield

$$X = \sum_{v=1}^{V} b^v x^v \tag{6}$$

Where $\{x^v\}$ is referred to as a Partial Transmit Sequence (PTS). The phase vector is chosen so that the PAPR can be minimized as follow

$$[\tilde{b}^1.....\tilde{b}^V] = \underset{u = 1, 2...U}{\arg\min} \left(\underset{n = 0, 2...N-1}{\max} \sum_{v=1}^{V} b^v x^v x[n] \right) \tag{7}$$

Then, the corresponding time-domain signal with the lowest PAPR vector can be expressed as

$$\tilde{x} = \sum_{v=1}^{V} \tilde{b}^v x^v \tag{8}$$

3.3 DFT Spreading

Suppose that DFT of the same size as IFFT is used as a (spreading) code then, the OFDMA system becomes equivalent to the Single Carrier FDMA (SC-FDMA) system because the DFT and IDFT operations virtually cancel each other. In this case, the transmit signal will have the same PAPR as in a single-carrier system.

In OFDMA systems, sub carriers are partitioned and assigned to multiple mobile terminals (users). Unlike the downlink transmission, each terminal in uplink uses a subset of sub carriers to transmit its own data. The rest of the sub carriers, not used for its own data transmission, will be filled with zeros. Here, it will be assumed that the number of sub carriers allocated to each user is M.

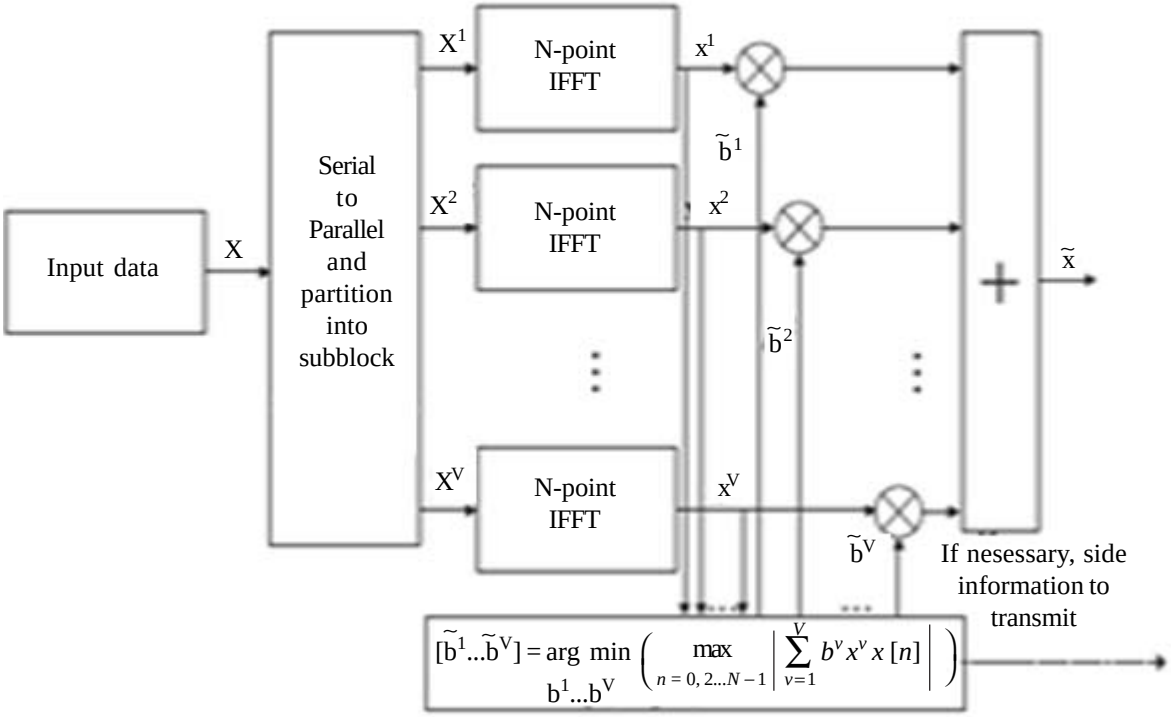

Figure 2. Block diagram of partial transmit sequence (PTS) technique for PAPR reduction

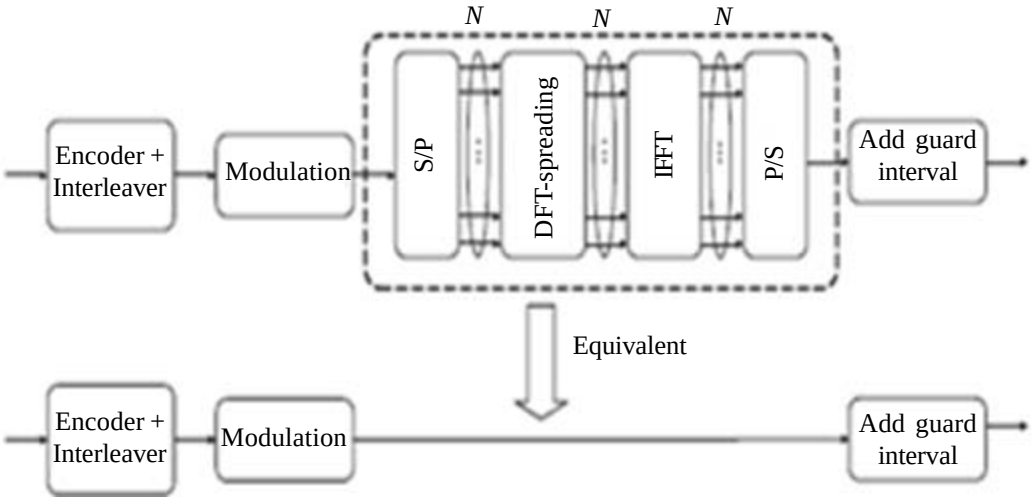

Figure 3. Equivalence of OFDMA system with DFT-spreading code to a single-carrier system

In the DFT-spreading technique, M-point DFT is used for spreading, and the output of DFT is assigned to the sub carriers of IFFT. The effect of PAPR reduction depends on the way of assigning the sub carriers to each terminal. As depicted in Figure 4, there are two different approaches of assigning sub carriers among users: DFDMA (Distributed FDMA) and LFDMA (Localized FDMA). Here, DFDMA distributes M DFT outputs over the entire band (of total N sub carriers) with zeros filled in N-M unused sub carriers, whereas LFDMA allocates DFT outputs to M consecutive sub carriers in N sub carriers. When DFDMA distributes DFT outputs with equi-distance N/M = S, it is referred to as IFDMA (Interleaved FDMA) where S is called the bandwidth spreading factor.

The input data $x[n]$ is DFT-spread to generate $x[i]$ and then, allocated as

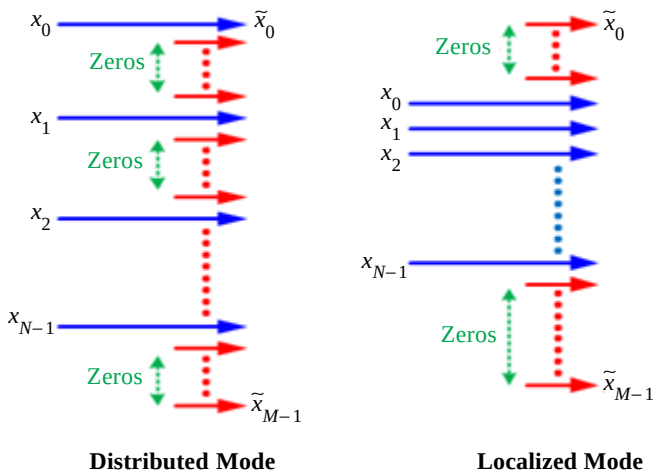

Figure 4. Sub carrier mapping for uplink in OFDMA systems: DFDMA and LFDMA

$$\tilde{X}[k] = \begin{cases} X[\frac{k}{s}], & k = S.m_1, m_1 = 0, 1, 2....M-1 \\ 0 & otherwise \end{cases} \tag{9}$$

The IFFT output sequence $\tilde{x}[n]$ with $n = M.s + m$, for $s = 0, 1, 2.....S-1$ and $m = 0, 1, 2.....M-1$ can be expressed as

$$\begin{aligned} \tilde{x}[n] &= \frac{1}{N}\sum_{k=0}^{K} \tilde{X}[k]\, e^{j2\pi \frac{n}{N} k} \\ &= \frac{1}{S}\cdot\frac{1}{M}\sum_{m_1=0}^{M-1} X[m_1]\, e^{j2\pi \frac{n}{M} m_1} \\ &= \frac{1}{S}\cdot\frac{1}{M}\sum_{m_1=0}^{M-1} X[m_1]\, e^{j2\pi \frac{M_s + m}{M} m_1} \\ &= \frac{1}{S}\left\{\frac{1}{M}\sum_{m_1=0}^{M-1} X[m_1]\, e^{j2\pi \frac{m}{M} m_1}\right\} \\ &= \frac{1}{S}.x[m] \end{aligned} \tag{10}$$

which turns out to be a repetition of the original input signal $x[m]$ scaled by $1/s$ in the time domain. In the IFDMA where the subcarrier mapping starts with the rth subcarrier ($r = 0, 1, 2.....S-1$), the DFT spread symbol can be expressed as

$$\tilde{X}[k] = \begin{cases} X\left[\frac{k-r}{s}\right], & k = S.m_1 + r \quad m_1 = 0, 1, 2....M-1 \\ 0 & otherwise \end{cases} \tag{11}$$

Then, the corresponding IFFT output sequence $\{\tilde{x}[n]\}$, is given by

$$\begin{aligned} \tilde{x}[n] &= \tilde{x}[Ms + m] \\ &= \frac{1}{N}\sum_{k=0}^{N-1} \tilde{X}[k]\, e^{j2\pi \frac{n}{N} k} \\ &= \frac{1}{S}\cdot\frac{1}{M}\sum_{m_1=0}^{M-1} X[m_1]\, e^{j2\pi\left(\frac{n}{M} m_1 + \frac{n}{M} r\right)} \end{aligned}$$

$$= \frac{1}{S} \cdot \frac{1}{M} \sum_{m_1=0}^{M-1} X\,[m_1]\, e^{j2\pi \left(\frac{m_s + m}{M} m_1 \right)} e^{j2\pi \frac{n}{N} r}$$

$$= \frac{1}{S} \cdot \left(\frac{1}{M} \sum_{m_1=0}^{M-1} X\,[m_1]\, e^{j2\pi \frac{m}{M} m_1} \right) \cdot e^{j2\pi \frac{n}{N} r} \tag{12}$$

$$= \frac{1}{S} e^{j2\pi \frac{n}{N} r} . x\,[m]$$

Comparing with the equation (10), one can see that the frequency shift of subcarrier allocation starting point by r subcarriers results in the phase rotation of $e^{\frac{j2\pi nr}{N}}$ in IFDMA. In the DFT-spreading scheme for LFDMA, the IFFT input signal $\widetilde{X}\,[k]$ at the transmitter can be expressed as

$$\widetilde{X}\,[k] = \begin{cases} X\,[k], & k = 0, 1, 2....M-1 \\ 0, & k = M, M+1,..., N+1 \end{cases} \tag{13}$$

The IFFT output sequence $\widetilde{x}\,[n]$ with $n = S.m + s$ for $s = 0, 1, 2, 3....S - 1$ can be expressed as follows

$$\widetilde{x}\,[n] = \widetilde{x}\,[Sm + s] = \frac{1}{N} \sum_{k=0}^{N-1} \widetilde{X}\,[k]\, e^{j2\pi \frac{n}{N} k} = \frac{1}{S} \cdot \frac{1}{M} \sum_{k=0}^{M-1} X\,[k]\, e^{j2\pi \left(\frac{s_m + s}{SM} \right) k} \tag{14}$$

For $s = 0$, equation becomes

$$\widetilde{x}\,[n] = \widetilde{x}\,[Sm] = \frac{1}{S} \cdot \frac{1}{M} \sum_{k=0}^{M-1} X\,[k]\, e^{j2\pi \left(\frac{Sm}{SM} \right) k} = \frac{1}{S} \cdot \frac{1}{M} \sum_{k=0}^{M-1} X\,[k]\, e^{j2\pi \frac{m}{M} k} = \frac{1}{S} x\,[m] \tag{15}$$

For $s \neq 0$. $X\,[k] = \sum_{p=0}^{M-1} X\,[p]\, e^{-j2\pi \frac{p}{N} k}$ such that equation (13) becomes

$$\widetilde{x}\,[n] = \widetilde{x}\,[Sm + s] = \frac{1}{S} \left(1 - e^{j2\pi \frac{s}{S}} \right) \cdot \frac{1}{M} \sum_{p=0}^{M-1} \frac{x\,[p]}{1 - e^{j2\pi \left(\frac{m-p}{M} + \frac{s}{SM} \right)}}$$

$$= \frac{1}{S} e^{j\pi \frac{(M-1)s - Sm}{SM}} \cdot \sum_{p=0}^{M-1} \frac{sin\left(\pi - \frac{s}{S} \right)}{Msin\left(\pi, \frac{Sm + s}{SM} - \pi \frac{p}{M} \right)} e^{j2\pi \frac{p}{M}} x\,[p] \tag{16}$$

From equations (15) and (16), it can be seen that the time domain LFDMA signal becomes the $1/S$ scaled copies of the input sequence at the multiplies of S in the time domain. The values in between are obtained by summing all the input sequence with the different complex-weight factor.

3.4 Pulse Shaping

Pulse shaping done using Raised Cosine filter is taken after IFFT stage for LFDMA technique. Pulse shaping is used to minimize Inter symbol Interference (ISI) and results in better transmission of OFDM signals. The optimum value of roll off factor α is chosen for obtaining better Simulation results.

4. Result Anlysis

Figure 5 shows a comparison of PAPR performances when the DFT-spreading technique is applied to the IFDMA, LFDMA, and OFDMA. Here, QPSK, 16-QAM, and 64-QAM are used for an SC-FDMA system with $N = 256$, $M = 64$, and $S = 4$. It can be seen from Figure 5 that the PAPR performance of the DFT-spreading technique varies depending on the sub carrier allocation method. In the case of 16-QAM, the values of PAPRs with IFDMA, LFDMA, and LFDMA for CCDF of 1% are 3.5dB, 8.3dB, and 10.8dB,

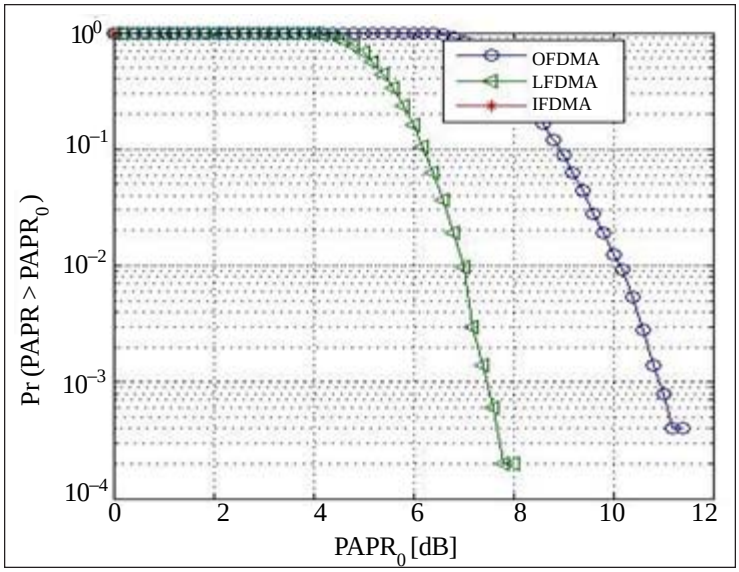

Figure 5 (a) QPSK

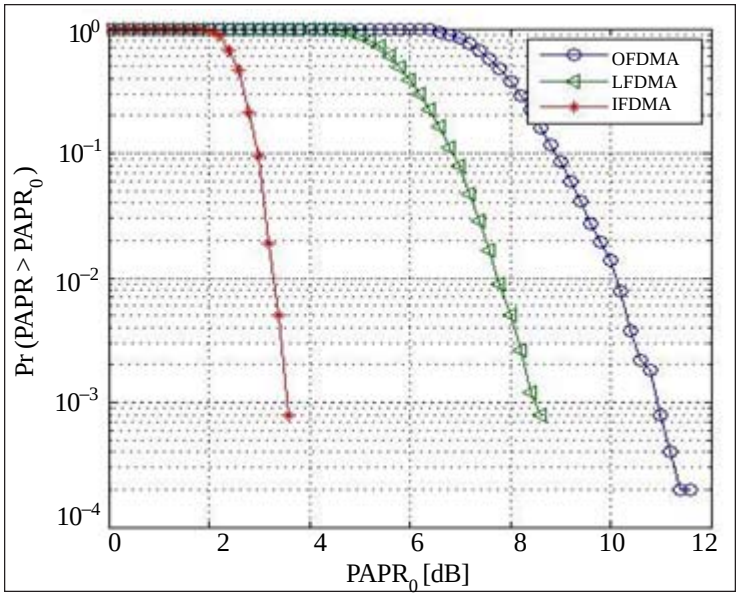

Figure 5 (b) 16-QAM

respectively. It implies that the PAPRs of IFDMA and LFDMA are lower by 7.3dB and 3.2dB, respectively, than that of OFDMA with no DFT spreading. Now, let us consider the effect of pulse shaping on the PAPR performance of DFT-spreading technique. Figure 6 shows the PAPR performance of DFT-spreading technique with IFDMA and LFDMA, varying with the roll-off factor α of the RC (Raised-Cosine) filter for pulse shaping after IFFT. It can be seen from this figure that the PAPR performance of IFDMA can be significantly improved by increasing the roll-off factor from $\alpha = 0$ to 1. This is in contrast with LFDMA which is not so much affected by pulse shaping. It implies that IFDMA will have a trade-off between excess bandwidth and PAPR performance since excess bandwidth increases as the roll-off factor becomes larger. The results here have been obtained with the simulation parameters of $N = 256$, $M = 64$, $S = 4$ (spreading factor), and $N_{os} = 8$ (over sampling factor for pulse shaping) for both QPSK and 16-QAM.

Further, let us consider the effect of pulse shaping on the PAPR performance of DFT-spreading technique. Figure 5 shows the PAPR performance of DFT-spreading technique with IFDMA and LFDMA, varying with the roll-off factor a of the RC (Raised-Cosine) filter for pulse shaping after IFFT. It can be seen from this Figure 5 that the PAPR performance of IFDMA can be

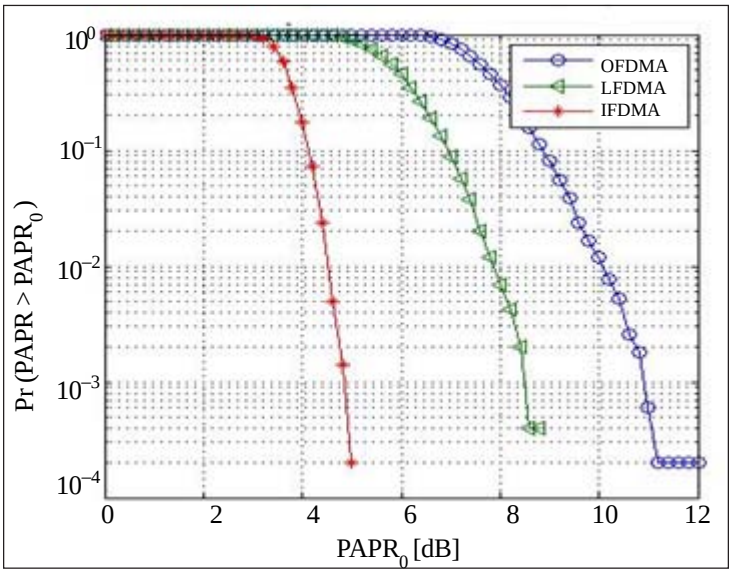

Figure 5 (c) 64-QAM

Figure 5. PAPR performances of DFT-spreading technique for IFDMA, LFDMA, and OFDMA

Parameter	**Values**
Bandwidth	1.4MHZ
FFT Size (N)	256
No. of the subcarriers per users (M)	64
Spreading factor(S)	4
No. of OFDM Symbols per 1 ms	14- normal Cp,12- extended CP
Modulations	QPSK,16-QAM & 64-QAM

Table 1. Parameters for simulations of DFT-Spreading

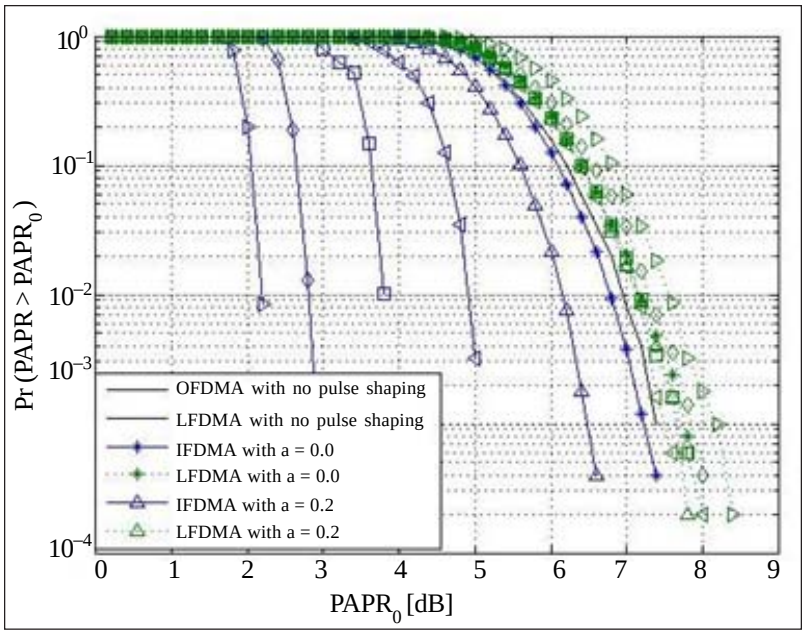

Figure 6 (a) QPSK

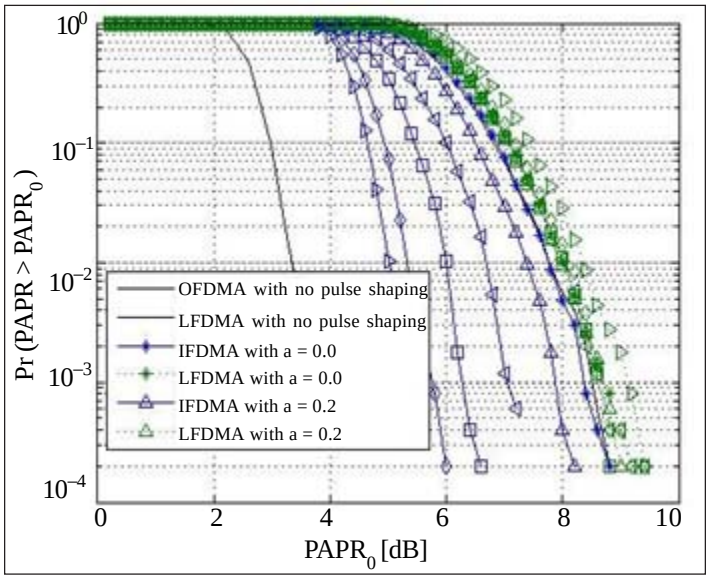

(b) 16-QAM

Figure 6. PAPR performances of DFT-spreading technique with & without pulse shaping

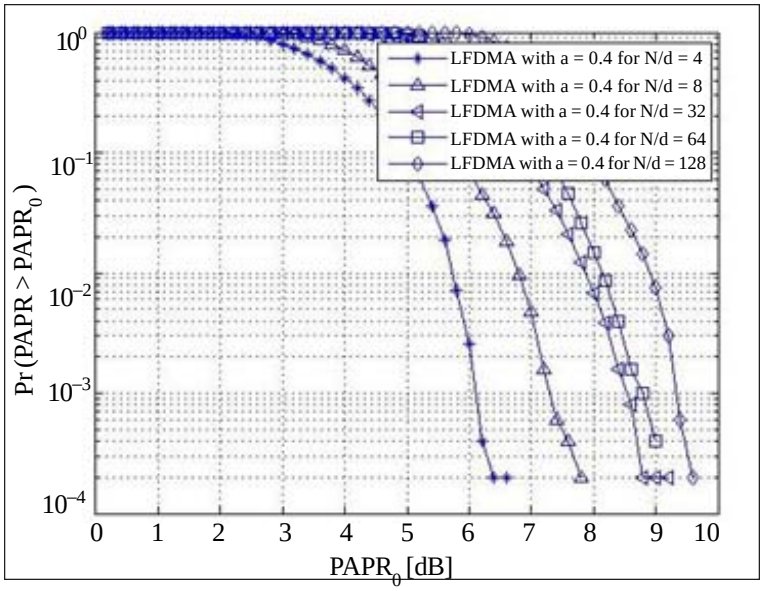

Figure 7. PAPR performance of DFT-spreading technique when N_d varies

significantly improved by increasing the roll-off factor from $\alpha = 0$ to 1. This is in contrast with LFDMA which is not so much affected by pulse shaping. It implies that IFDMA will have a trade-off between excess bandwidth and PAPR performance since excess bandwidth increases as the roll-off factor becomes larger. The results here have been obtained with the simulation parameters of $N = 256$, $M = 64$, $S = 4$ (spreading factor), and $N_{os} = 8$ (oversampling factor for pulse shaping) for both QPSK and 16-QAM.

Further, let us see how the PAPR performance of DFT-spreading technique is affected by the number of subcarriers, M, that are allocated to each user. Figure 7 shows that the PAPR performance of DFT-spreading technique for LFDMA with a roll-off factor of a $\alpha = 0{:}4$ is degraded as M increases, for example, $N_d = 4$ to 128. Here, 64-QAMis used for the SC-FDMA system with 256-point FFT ($N = 256$).

5. Conclusion

In this paper, performance enhancement of the OFDM signal uplink transmitter for LTE has been proposed and its PAPR is investigated through MATLAB simulations. In conclusion, the SC-FDMA systems with IFDMA and LFDMA have a better PAPR performance than OFDMA systems. This unique feature has been adopted for uplink transmission in 3GPP LTE, which has been evolved into one of the candidate radio interface technologies for the IMT-Advanced standards.

References

[1] Work Plan 3GPP (Release 8), 16 January 2012.

[2] Jianping Wang, Bosheng Liu, Xianwei Zhou. (2009). PCE Algorithm for PAPR Reduction in OFDM-of System, *IEEE Transactions on Consumer Electronics*, 55 (3), August.

[3] Malhar Chauhan, Saurabh patel, Hardik patel. (2013). Different Techniques to Reduce the PAPR in OFDM System, *International Journal of Engineering Research and Applications*, 2 (3), May-Jun.

[4] Raajan, N. R., Prabha, S., Meenakshi, D. (2013). Improved Performance in OFDM Systems by PAPR Reduction Techniques, International Conference on Computer Communication and Informatics, Jan.04- 06.

[5] Wang, Y. -C., Luo, Z. -Q. (2011). Optimized Iterative Clipping and Filtering for PAPR Reduction of OFDM Signals, *IEEE Transaction on Communications*, 59 (1), January.

[6] 3GPP. (Feb. 2003). TSG-RAN-1 Meeting #31, Technical description of the OFDM/IOTA modulation.

[7] Pauli, M., Kuchenbecker, H. P. (1997). Minimization of the Inter modulation distortion of a nonlinearly amplified OFDM Signal. *Wireless Personal Communications*. 4 (1) 93–101.

[8] Rohling, H., Grunheid, R. (May 1997). Performance Comparison of different multiple access scheme for the downlink of an OFDM communication system. IEEE VTC'97, 3, p. 1365–1369.

[9] Irukrulapati, N. V., Chakka, V. K., Jain, A. (2009). SLM based PAPR Reduction of OFDM signal using new phase sequence, *Electronic Letters*, 45 (24).

[10] Ren, G. L., Zhang, H., Chang, Y. L. (2003). A complementary clipping transform technique for the reduction of peak-to-average power ratio of OFDM system, *IEEE Transactions on Consumer Electronics*, 49 (4) 922–926, Nov.