The Influence of Communication Structure on Performance of an Agent-based Distributed Control System

Andreja Malus, Rok Vrabic, Dominik Kozjek, Peter Butala
Faculty of Mechanical Engineering
University of Ljubljana
Aškerceva 6, 1000 Ljubljana
andreja.malus@fs.uni-lj.si

Matjaz Gams
Jozef Stefan Institute
Department of Intelligent Systems
Jamova cesta 39, 1000 Ljubljana
matjaz.gams@ijs.si

ABSTRACT: *Industrial Internet of Things (IIoT) is a new concept denoting extensive use of ubiquitous connected devices on the manufacturing shop floor. While most recent research in this area focuses on the monitoring capabilities of IIoT and on the resulting data analysis, IIoT also presents an opportunity from the perspective of distributed control. The paper suggests that agent based control of an industrial process can be realized by a multiagent system in which each agent is able to learn the influence of its actions on the behaviour of the system and to communicate with other agents in its proximity. Influence of the communication structure on performance, robustness, and resilience are analysed for a case of an industrial compressed air system. The simulation results suggest that in such systems, communication between the supply and the demand side improves resilience, while the robustness is improved through learning.*

Keywords: Industrial Internet of Things, Multi-agent System, Distributed Control, Machine Learning, Robustness

Received: 12 April 2018, Revised 2 May 2018, Accepted 14 May 2018

1. Introduction

Cyber-physical systems (CPS) represent an emerging paradigm integrating computational, networking and physical processes to address requirements of future industrial systems [1]. Often the interfaces between the physical and the virtual worlds are

realized using connected intelligent sensing and actuating devices. Their use in manufacturing environment is the basis of the concept of Industrial Internet of Things (IIoT). Numerous connected IIoT devices enable acquisition and sharing of large amounts of data, promising time and cost savings, scalability and efficiency. However, as IIoT systems grow in size and complexity, their response times and computational complexity outgrow traditional centralized control systems. Researchers work on enhancing flexibility, robustness, adaptability and reconfigurability of CPS by employing concepts of distributed and autonomous control in dynamic environments of flexible manufacturing systems.

A common way to implement distributed control in manufacturing systems is by using autonomous computational entities called agents. Agents acquire information about their environment and take actions to influence the environment. They can exhibit various levels of intelligence depending on the method used to select an action based on the state of environment. Reflex agents passively react to signals from environment, while pro-active agents select their actions continuously to achieve a goal or utility. An agent that has the capacity to adapt its operation based on feedback from the environment is called learning agent [2].

In some applications, multiple software agents are used to collectively solve problems by interacting with each other and reaching mutual agreements through negotiations, bidding and other communication mechanisms, enabling reconfigurability and scalability [3]. Agents acting in parallel results in the system's global behaviour that may include emergent phenomena and is often difficult to predict in advance. Design of interactions between elements is therefore mostly performed using simulations to obtain the desired behaviour of the system in a trial and error manner. Although the ideas of agent-based systems originated more than two decades ago and much research has been done on intelligence of software agents and coordination mechanisms, not many examples of real-life implementations can be found in the manufacturing industry [4].

Despite the challenges of implementation in industrial applications, emerging computing paradigms, developing communication protocols, and decreasing cost of computing power and network communications are suggesting that the research field should be revisited in context of industrial applications.

In [5] a control method using rationally bounded learning agents was proposed. This paper extends this work by analysing the influence of different connection schemes on performance in normal and adverse conditions. The response of the system in adverse conditions can be evaluated from the point of view of robustness and resilience. Robustness measures the extent to which a disturbance affects the system's performance while resilience represents the system's ability of restoring normal operation. Using a simulation of an industrial compressed air system it is shown that (1) the communication between the agents representing the supply (compressors) and the agents representing the demand (consumers) improves the response of the system to repeated disturbance, (2) full connectedness is not necessary as additional connections beyond a certain point do not contribute to improved system performance, and that (3) the communication structure influences resilience, but not robustness.

2. Distributed Control with Rationally Bounded Agents

A perfectly rational agent makes decisions under the assumptions that (1) it has complete knowledge of the problem space and is aware of all its available actions, (2) the preferences of actions are known and (3) it has the ability to discover the optimal policy regardless of the necessary computational demand [6]. Absence of any of the three assumptions makes an agent rationally bounded [7]. In the engineering field, the use of the term bounded rationality refers to limited calculation time and computational capacity. Design of artificial agents strives for optimization under time and capacity constraints.

The presented agent model assumes that in a truly distributed system none of the agents has an overview of the state of the whole system and that each agent can communicate only with elements of the system (i.e. sensors, actuators, and other agents) in their proximity. Based on these limitations, the agent model defines what agents observe, how they learn from the observations, and how they communicate with other agents.

3. Agent Model

A multi-agent system is described as a network $N = (A, CA, S, CS, T, CT)$ where A represents a set of agents and CA a set of communication channels between pairs of the agents. S is a set of sensors, and CS a set of measurement channels between the agents and the sensors, where one agent is connected and reads measurement values from at least one sensor and each sensor is connected to one or more agents. Sensors and communication with other agents enable the agents to gain information about

the system but each agent can only have a partial view and no agent has an overview of the whole state of the system. Each agent is connected to exactly one actuator from the set of actuators T, the connections are represented in set CT.

All agents in the system have the same structure, regardless of their function in the system. The components of the model are shown in Figure 1. Agent $a_i \in A$ has some belief b_i about its environment based on measurements of the sensors it has access to S_i and predictions received from other agents P_{ji} as shown in Eq. (1).

$$b_i = f(S_i, P_{ji}) \tag{1}$$

The agent model also includes an environment model M_E that is used to make a set of predictions P_i about future sensor values based on current belief b_i and actions available U_i as shown in Eq. (2).

$$P_i = M_E(b_i, U_i) \tag{2}$$

Based on predictions P_i and the sensor goal values G_i the agent selects its next action u_i, as shown in Eq. (3), that minimizes the selection criterion (e.g. an error estimate) in the form of a function f_A.

$$u_i = \underset{U_i}{argmin}\,(f_A(M_E(b_i, U_i), G_i) \tag{3}$$

The environment model M_E is learned by observing the control actions u_i taken to influence the environment and the environment's response to the actions, captured by the agent's belief b_i. In absence of communication with other agents the environmental model represents the physical model of the system implicitly including other agents' influence on the state of system. When connected to other agents, an agent receives predictions of future states of environment. These predictions include the knowledge of other agents about their influence on the environment implicitly captured by their environmental models.

The agent acquires the environmental model using random forest algorithm [8]. The algorithm is a highly accurate ensemble

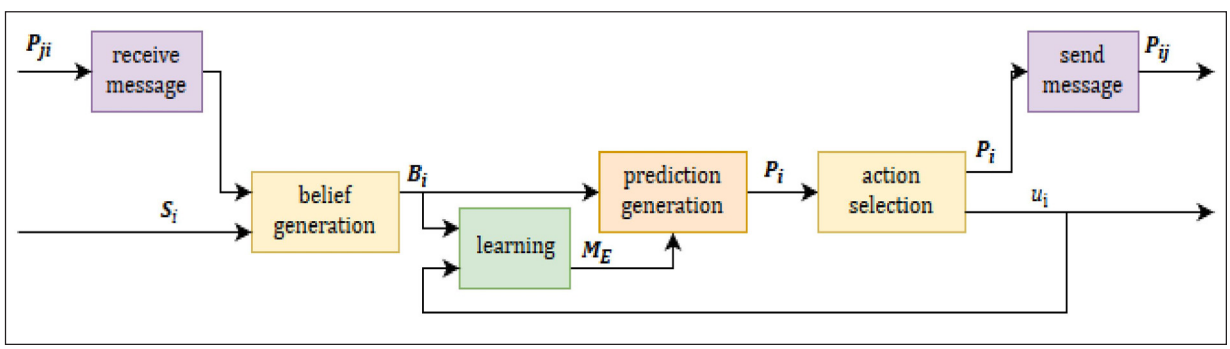

Figure 1. Communication schemes for different scenarios

learning method, resistant to over fitting and easy to use, since no scaling and normalization of the data is required.

4. Experimental Case

Compressed air is widely used in industrial systems as a medium for energy transfer to various systems, for example power equipment, spraying tools, conveyers, and power controls. It is safe, easy to use and maintain. However, more than 75 % of the life-cycle costs of compressed air system are accounted for by energy consumption [9] and reports estimate that only about 10–20% of the total input energy is utilized for useful work [10]. In the European Union compressed air systems are reported to consume 80 TWh of electricity [9] or 10% of industrial electricity consumption [10] but at the same time potential economic savings of more than 30 % are estimated [9]. Inefficiencies can be attributed to many reasons, the most important being leakages and inefficient control [10].

Few compressed air systems operate at full-load all of the time. Part-load performance is therefore critical and is primarily influenced by compressor type and control strategy. The choice of the type of control depends largely on the type of compressor being used and the demand profile of the system. For a system with a single processor and mostly steady demand, a simple control system may be appropriate. Simple control approach most often uses two pressure thresholds; when pressure drops below the lower threshold the compressor is turned on and if pressure exceeds the upper threshold the compressor is turned off. However, a complex system with multiple compressors, varying demand, and many types of end-uses requires a more sophisticated control strategy.

This developed distributed control model aims to present a robust and scalable alternative approach for a compressed air system with multiple compressors and compressed air storage tanks using autonomous switches for turning the compressors on or off and autonomous valves for controlling the transport paths.

5. Simulation

The simulated compressed air system, shown in Figure 3, consists of 2 compressors, 2 compressed-air tanks, 4 consumers, 3 smart valves, and piping. Each compressor supplies air to one tank and each tank has a safety valve to prevent the tank from becoming over-pressurized. Pressure sensors are installed on both compressed-air tanks and consumers.

The position of the valves in the system enables flow control of the air in the system. Smart valves and compressors' on/off switches are controlled by software agents, that are also connected to corresponding sensors as depicted in the figure. The parameters of the model, e.g. the pressures, time constants and leakage rates, are chosen to correspond to values that are commonly found in real systems. Agents have set target values for their corresponding sensors and the goal is to keep the air pressure values as close to the target values as possible all the time, regardless of consumption.

The agent has one random forest regressor for learning the environmental model for each of its connected sensors. The number of estimators is set to 100.

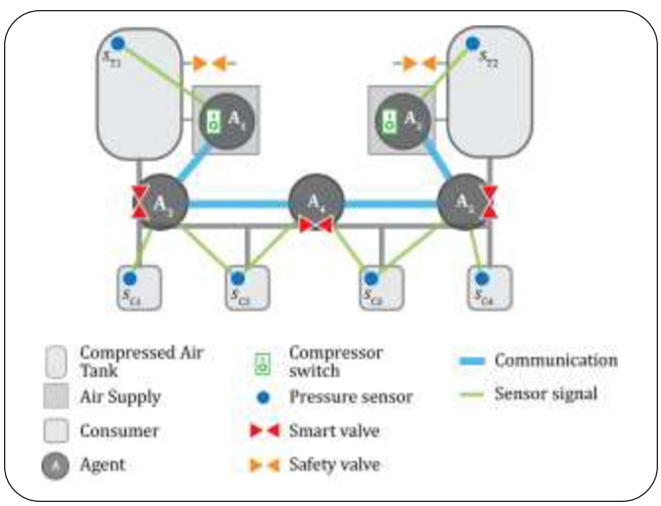

Figure 2. Simulated compressed air system

The input features for the regressor for the k -th sensor consist of the last action u_i taken by the agent, the observed sensor values $s_{ik} \in S_i$, the differences ΔS of each sensor value s_{ik} compared to every other sensor value s_{im}; $m \neq k$, the other agents' predictions P_{ji}, the differences in the other agents' predictions denoted as ΔP_{ji} and the existence of the other agents' predictions denoted as P^* as shown in Eq. (4).

$$x = \{u_i, S_i, \Delta S, P_{ji}, \Delta P_{ji}, P^*\} \quad (4)$$

The associated outputs y are the differences of the sensor values at times t and $t + \Delta t$, as shown in Eq. (5).

$$y = \{S(t + \Delta t) - S(t)\} \tag{5}$$

When calculating predictions for more than one step in advance, predictions of all agent's sensors for each following timestep (within the observed agent) are calculated prior to calculating predictions for the next time step.

The next action is selected using the mean-square-error function for evaluating the predictions against the goal values for all sensors. The function is shown in Eq. (6), where S_i is a set of agent's sensors, H is the number of future times for which the effects of the action $u \in U_i$ are assessed, called the prediction horizon, and p_{ik} and g_{ik}, $k \in S_i$, are predictions and goal values for the k -th sensor, respectively.

$$f_A(u) = \frac{1}{|S_i|} \sum_{k=1}^{|S_i|} \left(\frac{1}{H} \sum_{h=(t+\Delta t)}^{H} (p_{ik}(h) - g_{ik})^2 \right) \tag{6}$$

In 5 scenarios, the influence of different communication connection schemes, presented in Figure 2, was tested. In scenario A the agents don't communicate among themselves, in scenario B the compressor agents communicate with each other and the smart valves agents communicate with neighbouring smart valves agents. Communication connections in scenario C follow the flow of the air in the system. In scenario D each compressor agent communicates with the nearest two smart valves and the smart valves are also connected to their neighbours. The last scenario E represents full communication scheme in which all agents communicate with all other agents in the system.

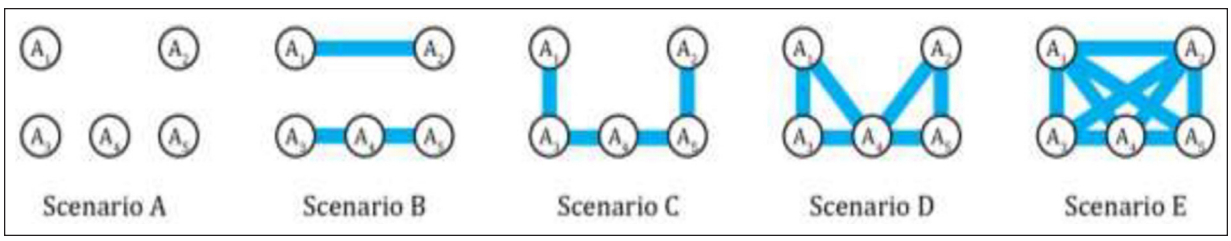

The total time of one simulation is set to 4000 s. Each scenario was simulated 150 times. The consumers' activity is random, each consumer is alternately set to on for 1 – 4 s and off for 30 – 40 s. The goal values of the compressor and the smart valves agents are set to 6.3 and 5.0 bar respectively and the safety valve has a set pressure of 10 bar for all scenarios.

The time step Δt is set to 1 s. The predictions are calculated for the next 1-3 s. The duration of current prediction horizon determines the duration of the corresponding reasoning cycle. The environmental model is updated every 500s.

In all scenarios a disturbance was simulated. The disturbance is represented by compressor 1 failure and opening of the corresponding tank's release valve, it is repeated 5 times and lasts for 200 s. Time of start of disturbance in simulation is noted $t\,d^1 = 1700$ s, $t\,d^2 = 2200$ s, $t\,d^3 = 2700$ s, $t\,d^4 = 3200$ s and $t\,d^5 = 3700$ s.

The results of the simulations were used to evaluate the ability of the system to withstand adverse conditions, called robustness, and its ability to recover from disturbance, called resilience. In the context of this paper, robustness c_{rob}, shown in Eq. (7), is defined as the ratio between the pressure drop in the system during disturbance Δp_d and the pressure p_s subtracted from the whole.

$$c_{rob} = 1 - \frac{\Delta p_d}{p_s} \tag{7}$$

The moment t_{bb} when the rise of the pressure in the system after the end of the disturbance reaches 1-1/e = 63, 2% of the pressure drop is observed. The difference between this moment and the time of the end of the disturbance is defined as bounce-back time Δt_{bb}. Resilience c_{res}, for the context of this paper, is defined as the inverse of the bounce-back time as shown in Eq. (8).

$$c_{res} = \frac{1}{\Delta t_{bb}} \tag{8}$$

6. Results

Simulation results for average sensor values measured by sensor SC1 for all five scenarios are shown in Figure 3. Due to learning, the pressure drop in the time of disturbance is lower after every repetition of the disturbance in the first four occurrences of the event.

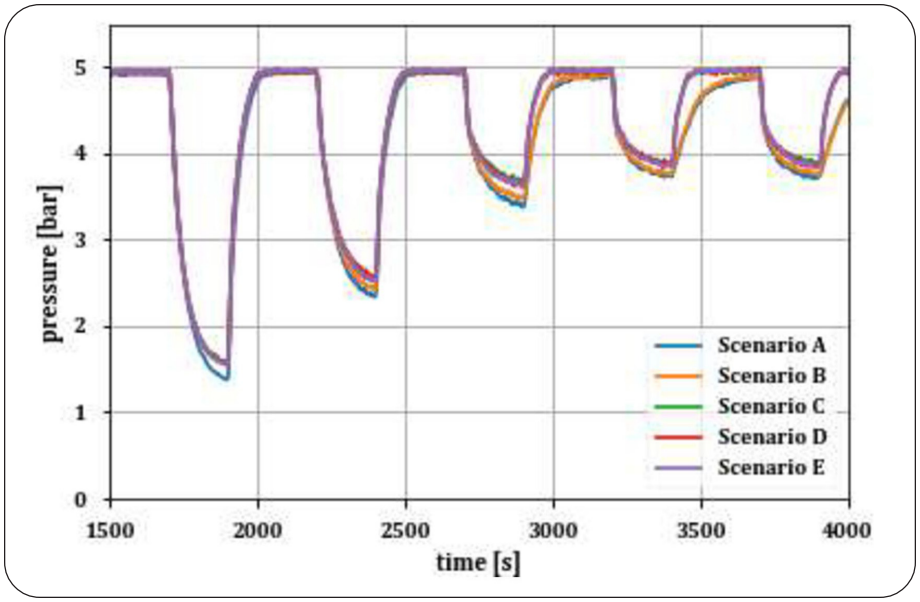

Figure 3. Comparison of average pressure on sensor Sc_1 for 5 scenarios

Figure 4 shows the pressure values 50 seconds after the end of the first and the fourth disturbance, effectively demonstrating the effect of learning in the considered scenarios. The first disturbance (Figure 4a) has approximately the same effect in all scenarios because the agents have not yet learned how to mitigate its effects. However, the bounce back from the fourth disturbance (Figure 4b) differs significantly depending on the scenario. In scenarios A and B in which the supply (compressors) and the demand (consumers) are not connected, the bounce back is slower and more scattered than in scenarios C, D, and E.

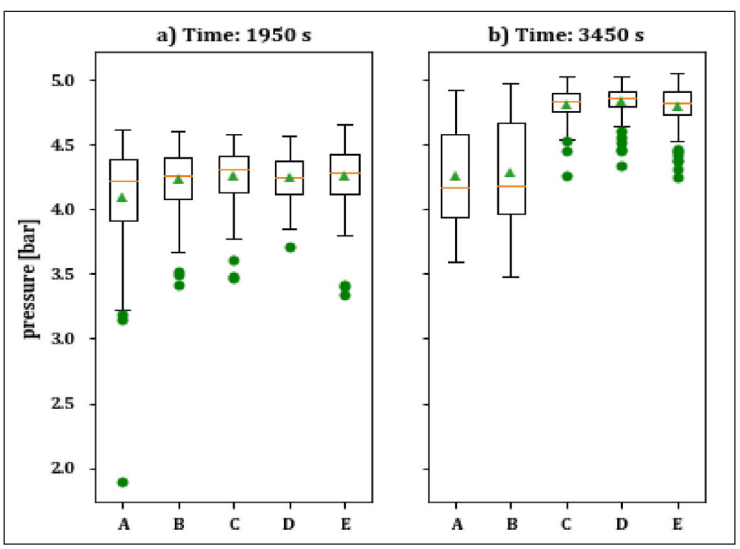

Figure 4. Pressure values measured by sensor Sc_1 after disturbances, green triangles show the average value and green dots represent the outliers

The results for evaluation of robustness and resilience from data measured by sensor SC1 are shown in Figure 5.

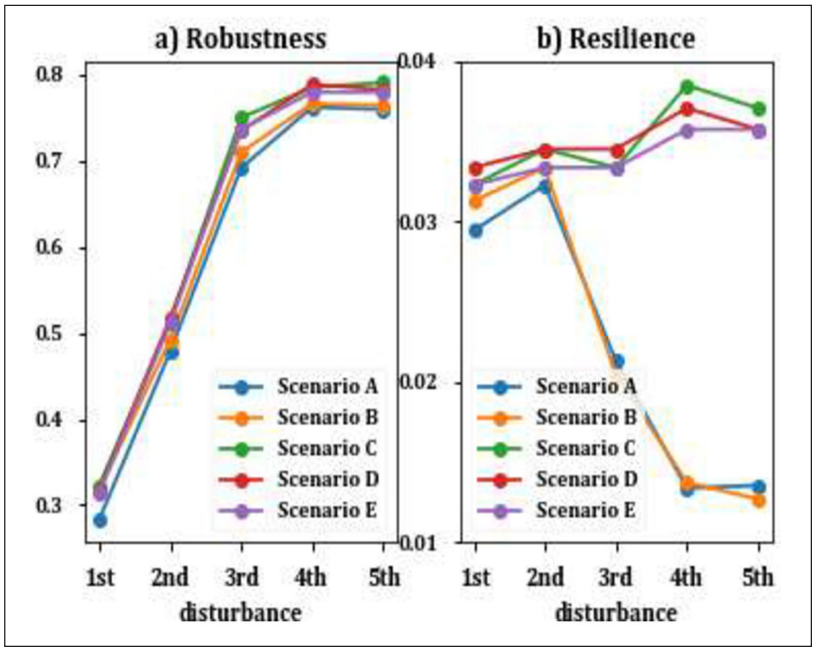

Figure 5. Robustness c_{rob} and resilience c_{res} during disturbances

As seen in Figure 5a, robustness improves over time in all scenarios. As agents learn to create better predictions of the effects of their actions, their responses improve. This is similar in all simulated scenarios, suggesting that it is not influenced by the communication structure.

Figure 5b shows that resilience improves over time in scenarios C, D, and E, in which the supply and the demand are connected. The resilience decreases in scenarios A and B where there is no communication between compressors and smart valves. In scenarios A and B, the agents on the demand side cannot directly detect the pressure drop which happens due to the disturbance. Their response is based solely on the observation of the pressures on the demand side. In time, they learn to prefer to keep the valves closed in order to maintain the pressure on the consumers during the disturbance. However, since they cannot detect the end of the disturbance directly, they have a delayed response when conditions normalize which lowers the overall resilience.

7. Conclusion

The paper argues that the current understanding of the role of IIoT, which is mostly related to monitoring and data analytics, should be extended to the domain of distributed control. A distributed, agent-based control model is presented. The model assumes that no agent has an overview of the whole system state, but rather only has a partial view of its neighbouring sensors, actuators, and other agents.

The paper builds on a previously conceived agent model [5] and explores the effects of the intra-agent communication structure for a simulated case of an industrial compressed air system. The results show that the communication structure influences resilience but not robustness. Robustness is improved through the learning mechanism in which the agents learn to predict the effects of their actions on the behaviour of the nearby system constituents. The presented agent model enables a smart controller to operate in a system without prior knowledge of the effects of its actions on the controlled variable. However, this paper shows that to achieve both robustness and resilience of the multi-agent control system, appropriate communication structure of the network must be implemented.

Future work will focus on the development of a real demonstrator and transfer of the learned policies from simulation to the demonstrator.

References

[1] Monostori, L., Kádár B, Bauernhansl, D., Kondoh, S., Kumara, S., Reinhart, G., Sauer, O., Schuh, G., Sihn, W., Ueda, K. (2016). Cyber-Physical Systems in Manufacturing. CIRP Annals – *Manufacturing Technology* 65 (2) 621–641.

[2] Russell, S. J., Norvig, P. (2010). Artificial intelligence: A modern approach (3rd ed.). Upper Saddle River, N. J. ; New Delhi: Prentice Hall/Pearson Education.

[3] Bruzzone, A. A. G., D'Addona, D. M. (2018). New Perspectives in Manufacturing: An Assessment for an Advanced Reconfigurable Machining System. *Procedia CIRP* 67. 552-557.

[4] Shen, W., Hao, Q., Yoon, H. J., Norrie, D. H. (2006). Applications of agent-based systems in intelligent manufacturing: An updated review. *Advanced Engineering Informatics* 20. 415 – 431.

[5] Vrabi , R., Kozjek, D., Malus, A., Zaletelj, V., Butala, P. (2018). Distributed control with rationally bounded agents in cyber-physical production systems. *CIRP Annals – Manufacturing Technology* 67 (1) 507 – 510.

[6] Rubinstein, A. (1998). Multiagent Systems: Algorithmic, Game-Theoretic, and Logical Foundations. MIT Press.

[7] Simon, H. A. (1972). Theories of Bounded Rationality. *Decision and Organization* 1 (1) 161–176.

[8] Breiman, L. (2001). Random Forests. *Machine Learning*, 45. 5–32.

[9] Radgen, P. (2004). Compressed Air System Audits and Benchmarking. Results from the German Compressed Air Campaign "Druckluft effizient". *In*: Proceedings of ECEMEI, Third European Congress on the Economics and Management of Energy in Industry, Rio Tinto, Portugal, April 6-9.

[10] Saidur, R., Rahim, N. A., Hasanuzzaman, M. (2010). A Review of Compressed-Air Energy Use and Energy Savings. *Renewable and Sustainable Energy Reviews* 1 4 (4) 1135– 1153.