Digital Inverse Filter Model

Karlusov V. Yu
Sevastopol State University
Russian Federation
dsndfn@yandex.ru

Rasskazov Sergey, Mariia Rubtsova
St. Petersburg State University
Russian Federation
abe33@yandex.ru

ABSTRACT: *The article is devoted to the approach to the construction of the inverse of the digital filter, which restores the original signal from the signal, distorted with the passage of the linear system. The procedure for construction provides for the use of information about the "statistical structure" of the processed signal and the characteristics of the distorting device. The efficiency of the approach is illustrated by the example of the signal patterns with different statistical properties and distorting device, widely used in measurement systems. The expressions for the calculation of the coefficients are given circuit simulation and calculation results.*

Keywords: The Filter Synthesis, Inverse Filter, Digital Filter, Random Signal

Received: 19 June 2017, Revised 27 July 2017, Accepted 5 August 2017

© 2017 DLINE. All Rights Reserved

1. Introduction

By analogy with the theory of automatic control, digital filtering is capable of solving both direct and inverse problems in accordance with the principles of symmetry [1, 2]. The reverse (inverse) signal conversion is aimed at its restoration or compensation of the distortions introduced by the sensor, the measurement channel devices, data channel or disturbing factors. According to [3, 4], task of inverse filtering, that used to recover $x(t)$ input from the measured output $y(t)$, is to find characteristics

$$\tilde{h}_{inv}(\omega) = \tilde{h}^{-1}(\omega) \tag{1}$$

$\tilde{h}(\omega)$ - describes the frequency response of a linear system, which introduces distortion into the signal. The system, which introduces distortion, can be named a distorting filter. The frequency response of a continuous inverse filter $\tilde{h}_{inv}(j\omega)$ serves as the basis for the construction of a digital filter.

Another approach is possible, which allows us to construct a Wiener filter types with the optimal mean-square error handling

(recovery in our case). Limitations of the Wiener filter is the need to set the cross-correlation function processes input and output. However, if the linear model of transformation is known, then the formula for the calculation of this function can be derived analytically or to obtain an expression for the numerical integration. In this case, the coefficients of the inverse filter {a0k} can be calculated without the condition (1) by solving a system of linear equations of the form

$$RA_0 = W; \qquad (2)$$

elements of the matrix R and the vector W are defined considering the processed random signal patterns and characteristics of distorting system . $\tilde{h}(\omega)$ Vector optimal coefficients A_0 is determined in the course of solving (2). The purpose of work is to develop a filter model, implementing this approach, and investigation its characteristics.

2. Inverse Filter Mathematical Model

Kindly assure that the Contact Volume Editor is given the name and email address of the contact author for your paper. The Contact Volume Editor uses these details to compile a list for our production department at SPS in India. Once the files have been worked upon, SPS sends a copy of the final pdf of each paper to its contact author. The contact author is asked to check through the final pdf to make sure that no errors have crept in during the transfer or preparation of the files. This should not be seen as an opportunity to update or copyedit the papers, which is not possible due to time constraints. Only errors introduced during the preparation of the files will be corrected.

This round of checking takes place about two weeks after the files have been sent to the Editorial by the Contact Volume Editor, i.e. roughly seven weeks before the start of the conference for conference proceedings, or seven weeks before the volume leaves the printer's, for post-proceedings. If SPS does not receive a reply from a particular contact author, within the timeframe given, then it is presumed that the author has found no errors in the paper. The tight publication schedule of LNCS does not allow SPS to send reminders or search for alternative email addresses on the Internet.

In some cases, it is the Contact Volume Editor that checks all the pdfs. In such cases, the authors are not involved in the checking phase.

2.1 Common View on Inverse Filter

It is assumed that the random signal $x(t)$ is stationary and ergodic, it is described by the autocorrelation function $Bx(\tau)$or its spectral analogue - power density spectrum $S(\omega)$,and the procedure of its transformation by means distorting a linear system into a signal $y(t)$ described by the integral convolution

$$y(t) = \int_{-\infty}^{\infty} h(\tau)x(t-\tau)d\tau \qquad (3)$$

where $h(\tau)$ - the hardware function of the system. Restoring readout signal $\{x(t)\}$ on the reference signal $\{y(t)\}$ is carried out using non-recursive digital filtering procedure

$$\tilde{x}(t) = \sum_{k=0}^{N-1} a_k\, y[t-(k-m)T_0] \qquad (4)$$

It is indicated (4): $\{ak\}$ - the filter coefficients to be calculation, N - their number, $T0$ - sampling process step, m - number of counts delay digital filter with respect to the current time t.

The result of calculations by formula (2) can be evaluated by the criterion

$$\varepsilon^2_{min} = \sigma^2_x - A_o^T W \qquad (5)$$

σ^2_x - is the variance of the original process $x(t)$. For comparison with the case where the digital filter coefficients $\{ak\}$ defined otherwise applicable formula

$$\varepsilon^2_{min} = \sigma^2_x - 2A^TW + A^TRA \tag{6}$$

Expression (2) is a discrete analogue of the solution of the integral equation of Wiener - Hopf. Its components within the task treated as follows. The matrix *R* is generated using the autocorrelation function of the processed process *y* (*t*) (at the output of distorting system). It can be calculated by means of integral transforms, which can be done in the time or frequency domains:

$$B_y(\tau) = \int_{-\infty}^{\infty}\int_{-\infty}^{\infty} B_x(\tau + \tau_1 - \tau_2)h(\tau_1)h(\tau_2)d\tau_1 d\tau_2 = \int_{-\infty}^{\infty} S(\omega)\left|\tilde{h}(\omega)\right|^2 e^{j\omega\tau}\, d\omega \tag{7}$$

The vector *W* is generated from the mutual correlation function readout $B_{xy}(\tau)$ random signals *x* (*t*) and *y* (*t*), which is calculated as follows:

$$B_{xy}(\tau) = \int_{-\infty}^{\infty} B_x(\tau - \tau_1)h(\tau_1)d\tau_1 = \int_{-\infty}^{\infty} S(\omega)\tilde{h}^*(\omega)e^{-j\omega\tau}\, d\omega \tag{8}$$

$\tilde{h}^*(\omega)$- frequency response, the complex conjugate with $\tilde{h}(\omega)$.

Thus, the solution of system (2), the components determining (7) and (8), solves the problem of calculating the filter coefficients when specifying the autocorrelation function of the distorted process, the frequency response of the distorting device, the number of coefficients and T0 sampling step.

2.2 Special Cases of Inverse Filter

Let the device, which introduces distortion, described as aperiodic element of the first order in the time and frequency domains

$$h(\tau) = \frac{C}{\tau_f} e^{-\frac{\tau}{\tau_f}}, \qquad \tau \geq 0,$$

$$\tilde{h}(\omega) = \frac{C}{1 + j\omega\tau_f}, \tag{9}$$

C – amplification factor or signal attenuation when passing system, τ_f – the time constant of the distorting filter. Let its input receives a random process, which corresponds to the correlation function of the density and type of the power spectrum

$$B_x(\tau) = \sigma^2 e^{-\frac{|\tau|}{\tau_x}},$$

$$S(\omega) = \frac{\sigma^2}{\pi} \cdot \frac{\tau_x}{1 + (\omega\tau_x)^2} \tag{10}$$

$\sigma 2$ – the power source of the process *x*(*t*), τx – its characteristic time scale. Implementation of such a process are sporadic. We compute the components of the system (2) for this particular case. Substituting (9) and (10) in (7) we obtain, after a series of transformations, the correlation function of the process (3) at the output of the distorting filter (9)

$$B_y(\tau) = C^2\sigma^2 \begin{cases} \dfrac{1}{\tau_f^2 - \tau_x^2}\left[\tau_f \tau_x e^{-\frac{|\tau|}{\tau_f}} - \tau_x^2 e^{-\frac{|\tau|}{\tau_x}}\right], & \tau_f \neq \tau_x, \\ \left[\dfrac{1}{2} - \dfrac{|\tau|}{\tau_f}\right] e^{-\frac{|\tau|}{\tau_f}}, & \tau_f = \tau_x. \end{cases} \tag{11}$$

Introducing the dimensionless designations

$$\omega_c = \frac{1}{\tau_f}; \qquad \beta = \omega_c T_0 = \frac{T_0}{\tau_f}; \qquad \gamma = \omega_c \tau_x = \frac{\tau_x}{\tau_f} \tag{12}$$

We arrive at the final expression for calculation

$$\frac{r[n,k]}{C^2\sigma^2} = \begin{cases} \dfrac{\gamma - \gamma^2}{1 - \gamma^2} e^{-|n-k|\frac{\beta}{\gamma}}, & \gamma \neq 1, \\ \left[\dfrac{1}{2} - |n-k|\dfrac{\beta}{\gamma}\right] e^{-|n-k|\frac{\beta}{\gamma}}, & \gamma = 1, \end{cases} \quad n = \overline{0, N-1}, \; k = \overline{0, N-1}, \tag{13}$$

Where $r[n, k]$ - R matrix elements in the system (2).

Similarly, we derive an expression for calculating the cross-correlation function of the signal $x(t)$ and $y(t)$. For this purpose, we substitute in (8) determining (9) and (10). After a series of transformations we obtain entry

$$B_{xy}(\tau) = C\sigma^2 \begin{cases} \tau_x\left[\dfrac{1}{\tau_\phi - \tau_x}\left(e^{-\frac{|\tau|}{\tau_\phi}} + e^{-\frac{|\tau|}{\tau_x}}\right) + \dfrac{1}{\tau_\phi + \tau_x} e^{-\frac{|\tau|}{\tau_\phi}}\right], & \tau_\phi \neq \tau_x, \\ \left[\dfrac{|\tau|}{\tau_\phi} + \dfrac{1}{2}\right] e^{-\frac{|\tau|}{\tau_\phi}}, & \tau_\phi = \tau_x, \end{cases}$$

Which, in view of (12) is converted to a form convenient for:

$$\frac{w[n]}{C\sigma^2} = \begin{cases} \dfrac{\gamma}{1-\gamma}\left(e^{-|m-n|\beta} + e^{-\frac{|m-n|\beta}{\gamma}}\right) + \dfrac{\gamma}{1+\gamma} e^{-|m-n|\beta}, & \gamma \neq 1, \\ \left[|m-n|\beta + \dfrac{1}{2}\right] e^{-|m-n|\beta}, & \gamma = 1, \end{cases} \quad n = \overline{0, N-1}, \tag{14}$$

where $[n]$ - the vector elements in the system of equations (2).

Now assume that a random signal is input to the distorting filter has a smoother, as compared with the process (10) implementations, and described:

$$B_x(\tau) = \sigma^2 e^{-\frac{\pi}{4}(\omega\tau_x)^2},$$

$$S_x(\omega) = \frac{\sigma^2\tau_x}{\pi} e^{-\frac{1}{\pi}(\omega\tau_x)^2} \qquad (15)$$

In this case, as a result of transformations we obtain formula

$$B_y(\tau) = \frac{C^2\sigma^2\tau_x}{\tau_f} e^{\frac{1}{\pi}\left(\frac{\tau_x}{\tau_f}\right)^2} \left[2\,\mathrm{ch}\left(\frac{|\tau|}{\tau_f}\right) - \mathrm{erf}\left(\frac{\tau_x}{\tau_f\sqrt{\pi}} - \frac{|\tau|}{2\tau_x}\sqrt{\pi}\right) - \mathrm{erf}\left(\frac{\tau_x}{\tau_f\sqrt{\pi}} + \frac{|\tau|}{2\tau_x}\sqrt{\pi}\right)\right],$$

$$B_{xy}(\tau) = \frac{C\sigma^2\tau_x}{\tau_f} e^{-\pi\left(\frac{\tau}{2\tau_x}\right)^2} e^{-\frac{1}{4\pi}\cdot\frac{[\pi\tau_f|\tau|-2\tau_x^2]^2}{\tau_f^2\tau_x^2}} \mathrm{erfc}\left(\frac{2\tau_x^2 - \pi|\tau|\tau_f}{2\sqrt{\pi}\tau_f\tau_x}\right).$$

On their basis, using the notation (12), we obtain expressions for the calculations

$$\frac{r[n,k]}{C^2\sigma^2} = \gamma e^{\frac{\gamma}{\pi}} \left[2\,\mathrm{ch}(|n-k|\beta) - \mathrm{erf}\left(\frac{\gamma}{\sqrt{\pi}} - \frac{|n-k|\beta}{2\gamma}\sqrt{\pi}\right) - \mathrm{erf}\left(\frac{\gamma}{\sqrt{\pi}} - \frac{|n-k|\beta}{2\gamma}\sqrt{\pi}\right)\right],$$

$$\frac{w[n]}{C\sigma^2} = \gamma e^{-\pi\left(\frac{n\beta}{2\gamma}\right)^2} e^{-\frac{1}{4\pi}\cdot\frac{[\pi n\beta - 2\gamma^2]^2}{\gamma^2}} \mathrm{erfc}\left(\frac{2\gamma^2 + \pi n\beta}{2\gamma\sqrt{\pi}}\right).$$

Signals described (10) and (15) belong to the "frontier" models of stochastic processes. It is believed that their implementation are sporadic. Process (10) (exponential correlation function) for small, vanishing values τx, it degenerates into a sequence of uncorrelated. On the contrary, the process (15) (correlation function) is smooth, infinitely many times differentiable, with strong statistical relationship slowly decreasing. Hypothetically, the real random processes fit into this range, so nearly enough to explore the extreme cases.

3. Organization of Computational Experiment

Computational experiment was carried out for each random signal model, which results in the figures below. Calculations were organized as follows. First models (10) and (15) conducted a solution of (2). The parameters σ2 and gain *C* were set equal to unity, the value of *T* - zero, since the characteristic (9) exists only for positive values of τ. Calculations were performed to determine the minimum value (5), and determine the appropriate relative optimal sampling step. For example, if you select a parameter value γ = 0,8 for both signals, and *N* = 17, then changing the parameter β, depending obtain the relevant minimum mean square deviation of the process *x* (*t*) before the distortion and the recovery process. Curve shown in Figure 1. From the above illustration shows that the random signal (10)

$$\frac{\beta}{\gamma} = \frac{T_0}{\tau_x} = 0{,}239, \quad \frac{\varepsilon^2_{min}}{\sigma^2} = 0{,}015; \quad \text{an to sigmal (15)} - \frac{T_0}{\tau_x} = 0{,}147, \quad \frac{\varepsilon^2_{min}}{\sigma^2} = 0{,}0496$$

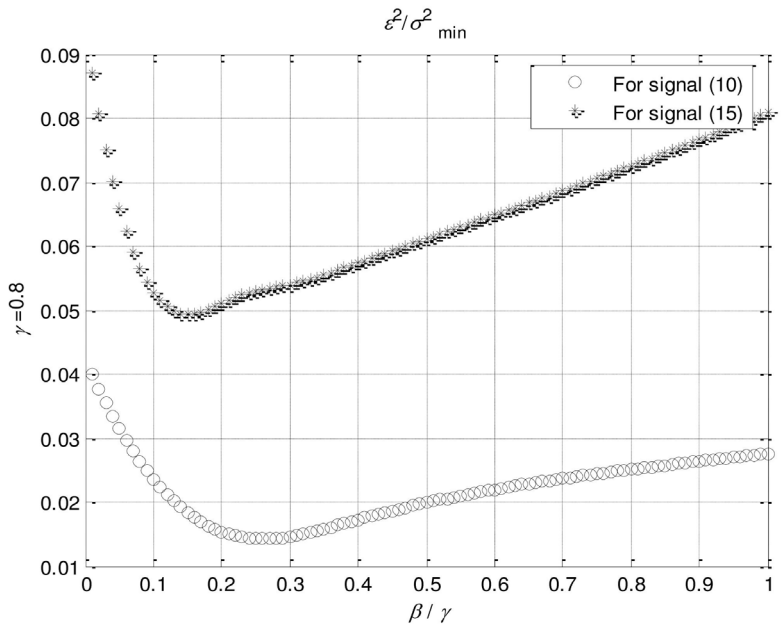

Figure 1. Selection of the optimal sampling step

After determining the optimal time of relative step sampling was conducted simulation, the circuit is shown in Figure 2.

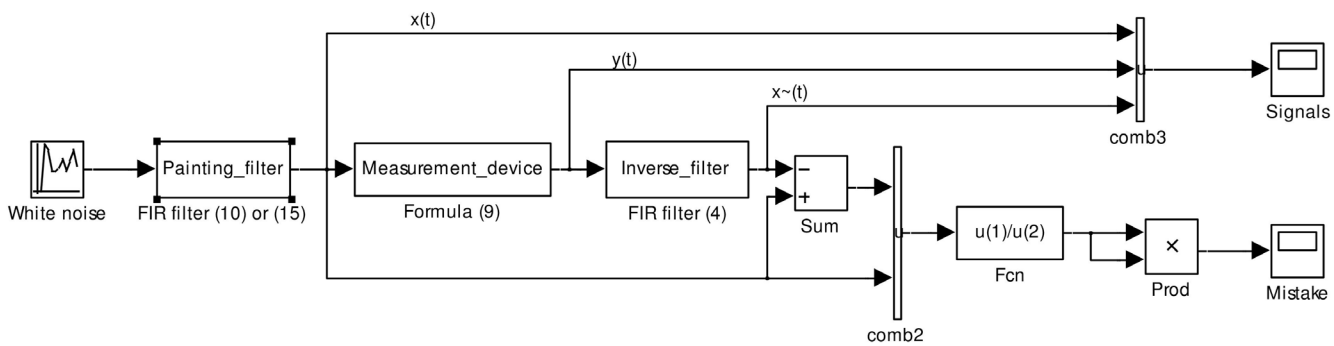

Figure 2. Organization of computational experiment

The circuit uses a coloring filter, whose coefficients are a set of samples $B_x\left(\frac{n\beta}{\gamma}\right), n = \overline{0, N-1}$. At the entrance of the coloring filter receives pseudo-random numbers, uniformly distributed in the interval (0, 1). As a result of the numerical sequence generated having statistical properties of signals (10) or (15). The signal output from the coloring filter is applied to the input of the digital filter modeling (9), then at reference (t) subjected to recovery by the algorithm (4). The error recovery was calculated at each point by the formula. $\varepsilon^2 = \left[\frac{x(r\beta/\gamma) - \tilde{x}(r\beta/\gamma)}{x(r\beta/\gamma)}\right]^2, \quad r = 0,1,2,..., \qquad (16)$

although they should be taken into account, starting *c r* = *N* + 1.

4. Simulation Results

the inverse of the filter results are shown in Figures 3 and 4. They show fragments of the following sample signals over time: the

initial, linear distortion undergone recovered from the distorted signal sample values are presented in steady state operation, when $r > 17$. Figure 5 shows the actual error recovery. The horizontal axis of all these illustrations of postponed some selected number of samples for demonstration.

The experimental errors for the shown in Figures 3 and 4 signals (10) and (15) are respectively 2,18×10-3 and 5,5×10-3. These values are lower than the calculated values. However, a plurality of samples averaged current fault is close to the theoretical value. The best accuracy of the signal recovery (10) as compared with (15) due to the fact that in relation to (10), the device (9) is a matched filter. This follows from the fact that the characteristic $h(t)$ and the correlation function BxÂõ(τ) describes the same exponential functions.

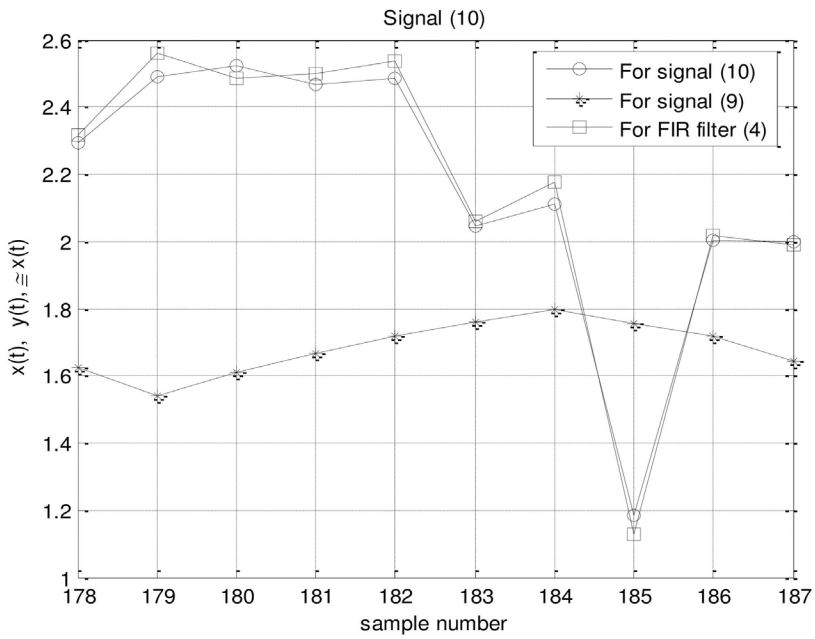

Figure 3. The result of the signal processing described (10)

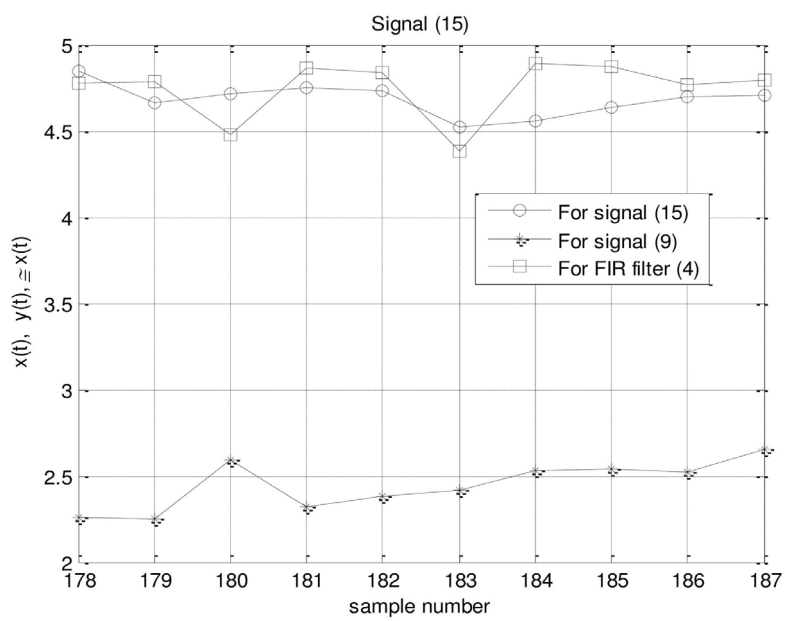

Figure 4. Result of the signal processing described (15)

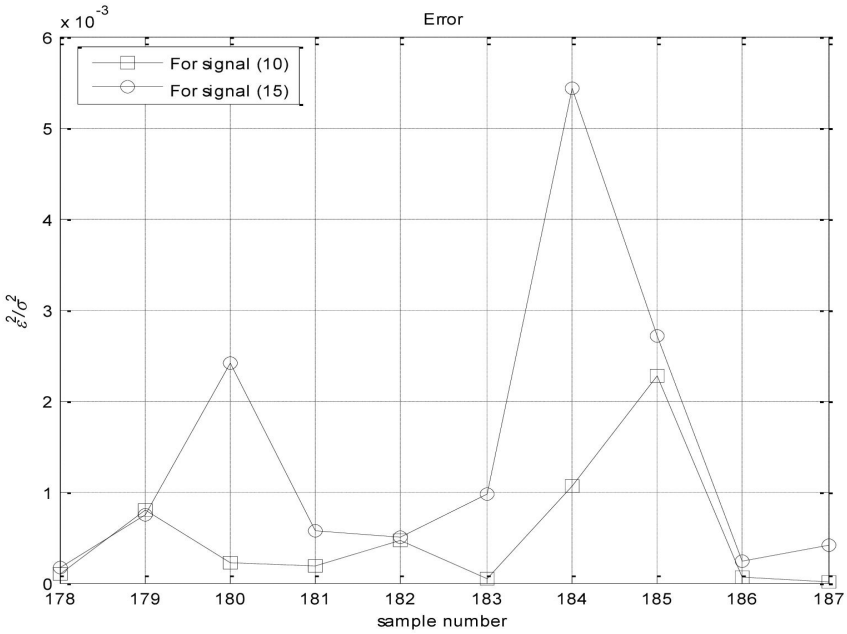

Figure 5. The actual error recovery processes

5. Conclusion

So, in this paper for the linear model, the model of the device distorting the digital inverse filter, optimal in the sense of Wiener. The influence of the choice of the number of coefficients and pitch sampling on the error signal and restore the choice of its minimum value. For a given signal patterns investigated the quality of their recovery. Calculations confirmed the efficiency of the proposed approach of constructing a filter.

References

[1] Krut'ko P. D. (1979).. Simmetrija v avtomaticheskih sistemah i algoritmah upravlenija / P.D. Krut'ko, E.N. Popov // Izv. AN SSSR. Tehn. *Kibernetika.* – 1. – S. 161 – 167.

[2] Petrov O.A. (1979). Postroenie algoritmov upravlenija kak obratnaja zadacha dinamiki / O.A. Petrov, P.D. Krut'ko, E.N. Popov // DAN SSSR, t. 247, 5. – S. 1078 – 1080.

[3] Kappelini V. Cifrovye fil'try i ih primenenie / V. Kappelini, A. Dzh. Konstantinidis, P. Jemiliani. – M.: Jenergoatomizdat, 1983. – 360 s.

[4] Vvedenie v cifrovuju fil'traciju / Pod. red. R. Bognera i A. Dzh. Konstantinidisa. – M. Mir, 1976. – 216 s.