Control of the permanent magnet synchronous generator using sliding modes for wind turbine application

Daniel Gerardo Ortega Meza
Autonomous University of cd. Juarez. Mexico
daniel.ortegame@hotmail.com

Onofre Amador Morfin Garduño, Manuel Ivan Castellanos Garcia
Autonomous University of cd. Juarez. Mexico
omorfin@uacj.mx, mcastell@uacj.mx

ABSTRACT: *One of the most used generators applied in medium capacity wind system is the permeant magnet synchronous generator, because of its high efficiency. The wind speed is constantly changing and the control system can be controlling the generator´s speed by currents to maximize the wind energy. In order to optimize the operation of the wind system, a robust control using Super-Twisting algorithm is applied, with which the generated power will be delivered to the grid electricity efficiently. We propose a decentralized controller in cascade form where the first stage the speed is controlled and the second stage the grid-side inverter controller side to regulate the bus DC-voltage and connect the wind system with the utility grid. A dynamic model of the permanent magnet synchronous generator at dq coordinate frame is used in the process design of the speed controller. A LCL-filter is used as coupling medium between the wind system and the grid. Finally, simulation results of the wind systems are reported to validate the performance of the proposed controller.*

Keywords: Permanent magnet synchronous generator, Super-twisting algorithm, Grid-side inverter

Received: 23 April 2017, Received 21 May 2017, Accepted 28 May 2017

1. Introduction

The energy situation of the world is critical: the hydrocarbons tend to deplete, as well as the pollution that these cause. Research and development of systems that depend on clean energies such as solar and wind power is of paramount importance.

The permeant magnet synchronous generator (PMSG) is a rotary electric machine capable of transforming mechanical energy, in this case the wind energy, into electricity; magnets that are mounted in the rotor provide the magnetizing of the generator [1].

Contribution: This work proposes a robust control scheme based on the block control linearization (BC) technique combined with a second-order sliding mode control, called the Super-Twistig (ST) algorithm. The BC technique is used to design a variable tracking error surface, whereas the ST algorithm guarantees a robust convergence of the movement of the closed system state to the surface.

The description of the procedure is to create a program in MathWorks® MATLAB® Simulink® which will simulate the behavior of the whole control system of a wind turbine, creating as a first step a program that simulates the behavior of the wind turbine, which describes the dynamics of the turbine. Then the second step from the model of the CD motor create a control from their equations of state where the torque is controlled, once the controller obtained the reference speed at which the DC motor has to follow the torque of the emulator turbine created in the first step. The third step to create a control for the PMSG from the input speed of the generator, the controller is designed from its state equations obtaining the control surfaces to apply the control algorithm to the surfaces. The fourth step, it is necessary to deliver the energy extracted from the wind to the electric grid, for this it is necessary the inverter model side electric grid, creating a controller from its state equations, this in order to find the control surfaces at the which the control algorithm will be applied.

2. Description of the control system

In wind applications where the PMSG is used, the typical connection scheme is shown in Figure 1., where two inverters in back-to-back configuration, the inverter that is connected to the PMSG AC / DC allows controlling the speed of it and the inverter grid side DC / AC controls the power delivered to the electric grid.

The great advantage of this system is that compared to the conventional PMSG this does not require an excitation winding, also its high efficiency [1].

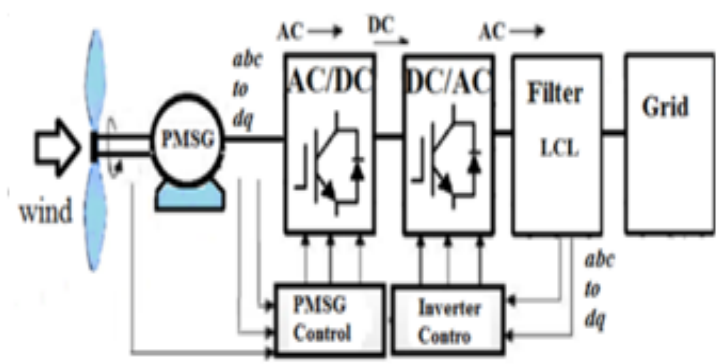

Figure 1. Diagram a blocks of a system Back to Back

3. Emulation of the wind turbine

It is proposed using a DC motor controlling the torque, proposing a reference torque, in this case that of the turbine emulator, using the following equations.

The wind turbine is a turbomachine motor that exchanges movement with the wind, by rotating a rotor. The mechanical energy of the rotor shaft can be harnessed to generate electricity, the energy extracted from the wind can be described as follows equations [2, 3]:

$$P_m = \frac{1}{2}\rho\pi R_t^2 C_p v_w^3 \qquad (1)$$

where P_m is the mechanical power extracted from the wind, ρ_a is the air density, v_w is the wind speed, R_t the turbine radius, ans C_p is the power coefficient, which can be modelled of the following form [2, 3] :

$$C_p\left(\lambda_v,\beta\right)=C_1\left(\frac{1}{\lambda_i}-C_1\beta-C_4\right)e^{\frac{-C_5}{\lambda_i}}+C_6\lambda, \tag{2}$$

the term λ_v named as velocity tip ratio is defined as follows [2, 3]:

$$\lambda_v=\frac{\omega_{tb}R_t}{v_w}, \tag{3}$$

ωtb is the velocity turbine [2, 3]:

$$\frac{1}{\lambda_i}=\frac{1}{\lambda+0.08\beta}-\frac{0.035}{\left(\beta^3+1\right)}\ , \tag{4}$$

where β is the angle attack of the wings, each wind turbine has very particular characteristics, the equations shown are the most general way of representing them.

4. Dynamic model of the cd motor for the emulator

The DC motor is a machine that has a simple dynamics, But which in turn presents diverse equations because the motor performs electrical and mechanical phenomena shown in eq. (5) [4, 5, 6].

$$\frac{d\omega_m}{dt}=\frac{K_m i_{eff}}{J_m}i_a-\frac{B_m}{J_m}\omega_m-\frac{T_e}{J_m},$$

$$\frac{di_a}{dt}=-\frac{R_a}{L_a}i_a-\frac{K_f i_{eff}}{L_a}\omega_m+\frac{1}{L_a}u_a, \tag{5}$$

Armature resistance R_a, armature inductance L_a, ω_m is defined as the angular velocity, i_a is the armature current, i_{eff} is the effective current, K_m is the motor constant mechanical, K_f is the motor constant electric, T_e is the electromagnet torque,J_m moment of inertia, B_m coefficient of friction and u_a is the supply voltage and the control input. For the purpose of emulation of the turbine, the technique is used by feedback of states, where we define the error variables as follows:

$$T_{eref}=0.0000351\omega_{tb}^2 \tag{6}$$

$$\varepsilon_{cd}=T_{ref}-T_e, \tag{7}$$

$$\varepsilon_{cd}=T_{ref}-K_f i_{eff}i_a,$$

$$\dot{\varepsilon}_{cd}=\dot{T}_{ref}-K_f i_{eff}\dot{i}_a=-K_m\varepsilon_{cd}, \tag{8}$$

where T_{ref} is the reference torque, to apply the ST control algorithm it is necessary to define the control surface:

$$S_{cd}=K_m\varepsilon_{cd}-\dot{\varepsilon}_{cd}, \tag{9}$$

where $k_m > 0$. In such a way it is like emulating the turbine, for the control of speed we apply the control algorithm ST [4, 5]:

$$u_a = \lambda \,|\, s_{cd} \,|^{(1/2)} \; sign(s_{cd}) + u_1$$

$$\dot{u}_1 = \begin{cases} u, & |u_a| > u \\ \alpha \, sign(s_{cd}), & |u_a| \le u, \end{cases} \tag{10}$$

where u is the nominal value of the motor armature DC. The gains of control λ and α So that the state vector of the system converges to the surface $s = 0$ in finite time, s are errors. The measured state variables are the torque of the rotor, T_e and the current i_a. This way the emulation of the turbine is made.

5. Dynamic model of Synchronous machine

The model of the synchronous machine is the same as for generator and motor. The conditions are different for the generator as generating currents are negative and as motor are positive; the model is defined from the following [5, 6]:

$$\mathrm{v}_a = \mathrm{r}_a \mathrm{i}_a + \frac{d\psi_a}{dx},$$

$$\mathrm{v}_b = \mathrm{r}_b \mathrm{i}_b + \frac{d\psi_b}{dx}, \tag{11}$$

$$\mathrm{v}_c = \mathrm{r}_c \mathrm{i}_c + \frac{d\psi_c}{dx}.$$

The model of PMSG is of order three, working with the previous model is complex, reason why it is used to the transformation of Park eq.(12) Which changes the frame of reference of an abc model to a model d_{q0} orthogonal coordinate frame, which allows to reduce the order of the equations, if the model is balanced the zero reference is equal to zero. The signals obtained are similar to direct signals [4]:

$$T_{dq} = \frac{2}{3}\begin{bmatrix} cos(\delta) & cos\left(\delta - \frac{2\pi}{3}\right) & cos\left(\delta + \frac{2\pi}{3}\right) \\ -sin(\delta) & -sin\left(\delta - \frac{2\pi}{3}\right) & -sin\left(\delta + \frac{2\pi}{3}\right) \\ \frac{\sqrt{2}}{2} & \frac{\sqrt{2}}{2} & \frac{\sqrt{2}}{2} \end{bmatrix}, \tag{12}$$

the simplified dynamic model in the dq orthogonal coordinate frame is more efficient and simple [1, 5, 7, 8]:

$$\frac{di_d}{dt} = -\frac{R_e}{L_d} i_d + \frac{L_q}{L_d} \omega_e p i_q + \frac{u_d}{L_d}$$

$$\frac{di_q}{dt} = -\frac{R_e}{L_q} i_q - \frac{L_d}{L_q} \omega_e p i_d - \frac{\psi_f}{L_q} \omega_e p + \frac{u_q}{L_q}. \tag{13}$$

R_e is the stator resistance, L_q and L_d are the inductances of the generator d y q. ψ_f is the permanent magnet flux and ω_e is the

speed of electric rotation of the generator, p is the number of poles of the generator. The electric speed is defined as [1, 5]:

$$d\delta/dt = \omega_e, \tag{14}$$

The mechanical speed is a function of the number of poles p of the generator [1, 5]:

$$\omega_m = \omega_e p. \tag{15}$$

In the mechanical subsystem, the torque generated internally by the rotor balances the opposition pairs as the friction pair, the inertial torque and the load torque. Using Newton's second law we obtain the differential equations that describe the mechanical behavior of the generator [1, 5, 9]:

$$\frac{d\omega_m}{dt} = \frac{T_e}{J_g} + \frac{T_l}{J_g} - \frac{B_g \omega_m}{J_g}, \tag{16}$$

where they are defined as follows ω_m is the mechanical speed, T_l is the charging pair, J_g is the equivalent of the moment of inertia, B_g is the coefficient of viscous friction, the electromagnetic torque T_e is defined as follows:

$$T_e = \frac{P}{\omega_m}, \qquad 17)$$

where de P is the power, E is the voltage of the generator then [1, 7, 9]:

$$T_e = \frac{3}{2} p i_q \psi_f, \tag{18}$$

the state equations eq.(13) are fundamental for defining control surfaces.

6. PMSG speed control

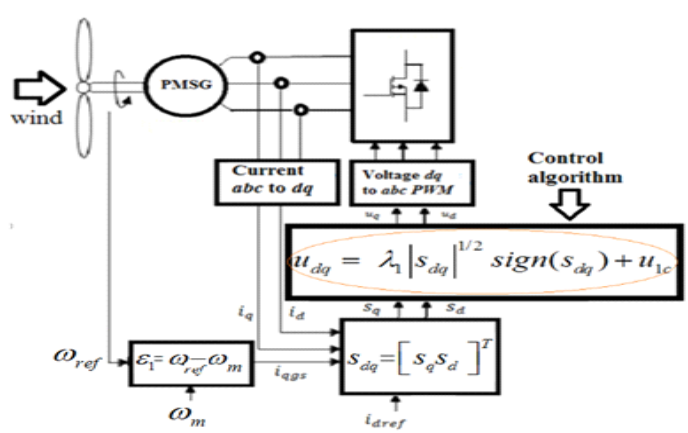

Figure 2. PMSG control schemes

The Park transformation of the dynamic generator model allows designing a controller from the dq orthogonal coordinate frame. The complete scheme is shown in Figure 2., where we can observe how the sensed data are obtained and what is the order of the control.

Starting from the following [1]:

$$\varepsilon_1 = \omega_{ref} - \omega_m, \tag{19}$$

where ω_{ref} is the reference speed at which we want the PMSG to remain stable, ω_m is the mechanical speed that is entering to the PMSG.

$$\dot{\varepsilon}_1 = \dot{\omega}_{\text{ref}} - 1/J\,(T_e + T_l - B_g\,\omega_m), \tag{20}$$

we also substitute T_e:

$$\dot{\varepsilon}_1 = \dot{\omega}_{\text{ref}} + T_l/J - B\omega_m/J - 1/J\; 3/2\; p i_q \psi_f, \tag{21}$$

considering that it is cylindrical poles as follows:

$$\dot{\varepsilon}_1 = \dot{\omega}_{ref} + 1/\text{J}\,(T_l - B\omega_m - 3\text{p}/2\; i_q \psi_f) = -K_1 \varepsilon_1, \tag{22}$$

the constant $K_1 > 0$. To apply the BC technique by currents of equation depending of i_{qref}

$$i_{qref} = 2/3p\psi_f\;(J_g\,K_1\varepsilon_1 + J_g\,\dot{\omega}_{ref} - T_1 + B_g\omega_m), \tag{23}$$

defined the reference current i_{qref}, The control surface can be defined by comparing it against the current produced by PMSG at that moment:

$$\varepsilon_2 = i_{qref} - i_q, \tag{24}$$

where:

$$\varepsilon_2 = S_q, \tag{25}$$

to define the surface for the reference current reference i_d axe is generated by PMSG and for the system to be the most stable and with an adequate power factor we consider the $i_{dref} = 0$, then:

$$\varepsilon_3 = i_{dref} - i_d, \tag{26}$$

where:

$$\varepsilon_3 = S_d, \tag{27}$$

it is possible to apply the robust control algorithm [4]:

$$S_{dq} = [S_q\;\; S_d]^T, \tag{28}$$

$$u_{dq} = \lambda_1\,|\,S_{dq}\,|^{1/2}\,sign(S_{dq}) + u_{1c},$$

$$\dot{u}_{1c} = \begin{cases} V_{cd}, & |u_{dq}| > V_{cd} \\ \alpha_1\,sign(S_{dq}), & |u_{dq}| \le V_{cd} \end{cases} \tag{29}$$

where $V_{cd} = [v_{cd}\;\; v_{cd}]^T$ is the voltage that controls Optimum of the PMSG, the dq axes is similar to direct signals. The gains of control λ_1 and α_1 ensures that control surfaces achieve their control goal faster or slower as required, The surface s tend to zero in finite time [4]. The measured state variables are the i_q,ω_{me} and i_d. Figure 2.

7. Dynamic model of grid-side converter

The Control system of the converter DC/AC delivery and synchronize the electricity generated by the PMSG to the electricity grid, the system is built by a three-phase inverter, three coupling coils, power grid and controller. This system is designed according to the balance of voltages at coil terminals that match the electrical energy between the input and the output of the inverter as can be observed [4, 10]:

$$v_{abct} - v_{abcs} = R_c\, i_{abct} + L_c\, di_{abct}/dt,$$

$$v_{dc}\, C_b = v^T_{abct} i_{abct}, \tag{30}$$

where v_{abct} are the voltages of the electrical grid side, i_{abct} are the currents of the electrical grid side, v_{abcs} and i_{abcs} are the voltages and currents of the system. R_c and L_c is the resistance and inductance of the filter, C_b is the direct bus capacitor, v_{dc} is the voltage of the capacitor on the direct bus. The system described is a fourth order system, to reduce the order we use Park eq.(12), which from an abc model we convert it to a model in *dq*, in the following way [4, 10]:

$$\frac{dv_{dc}}{dt} = \frac{3}{2C_b v_{dc}}\left(v_{dt} i_{dt} - v_{qt} i_{qt}\right),$$

$$\frac{di_{dt}}{dt} = -\frac{R_c}{Lc} i_{dt} + \omega_t i_{qt} + \frac{v_{dt}}{L_c} - \frac{v_{ds}}{L_c}, \tag{31}$$

$$\frac{di_{qt}}{dt} = -\frac{R_c}{Lc} i_{qt} - \omega_t i_{dt} + \frac{v_{qt}}{L_c} - \frac{v_{qs}}{L_c},$$

where v_{ds}, v_{qs} and i_{ds}, i_{qs} are the voltages and currents of the system in the *dq* axes and v_{dt}, v_{qt} and i_{dt}, i_{qt} Are the voltages and currents of the electrical grid side. For the design of the controller, the direct bus voltage is considered as the target to be controlled. The following was developed in [4]:

$$\varepsilon_{1c} = v_{dcref} - v_{dc}, \tag{32}$$

derive the ε_{1c} To get their system dynamics [4]:

$$\dot{\varepsilon}_{1c} = \dot{v}_{dcref} - \dot{v}_{dc}$$

$$\dot{\varepsilon}_{1c} = \dot{v}_{dcref} - 3/2C_b v_{dc}(v_{dt} i_{dt} - v_{qt} i_{qt}) = K_{1c}\varepsilon_{1c}, \tag{33}$$

the constant $k_{1c} > 0$. Whit this information i_{dt} to obtain the reference current i_{dtref}. It is considered v_{qt} Like zero, the definition is as follows [4]:

$$\varepsilon_{2c} = i_{dtref} - i_{dt}, \tag{34}$$

where P is the power of the system (W), the Q_{ref} (VAR), consider a power factor f_p suitable so that there are no voltage drops, increase in current for that reason relates the following [4]:

$$i_{dtref} = \frac{2C_b v_{dc} K_{1dc}\varepsilon_{1dc}}{3v_{dt}}, \tag{35}$$

the following error variable is defined [4]:

$$Q_{ref} = P\frac{\sqrt{1 - fp_{des}^2}}{fp_{des}} \tag{36}$$

$$\varepsilon_{3c} = Q_{ref} - Q_c, \tag{37}$$

based on the above deductions, the control surfaces are [4]:

$$\varepsilon_{2c} = S_{dc},$$

$$\varepsilon_{3c} = S_{qc},$$

$$S_c = [S_{dc} \;\; S_{qc}]^T, \tag{38}$$

$$u_i = \lambda_i |S_c|^{1/2} \, sign(S_c) + u_{sc}$$

$$\dot{u}_{sdq} = \alpha_i \, sign\,(s),\; i = d, q, \tag{39}$$

where u_i is the voltage dq which controls the power that will be delivered to the mains. The gains of control λ_i and α_i ensures that control surfaces achieve their control goal faster or slower as required, The measured state variables are the v_{dc}, Q_c and i_{dt} reactive power and direct-current bus voltage. In Figure 3. The complete control scheme is shown [4].

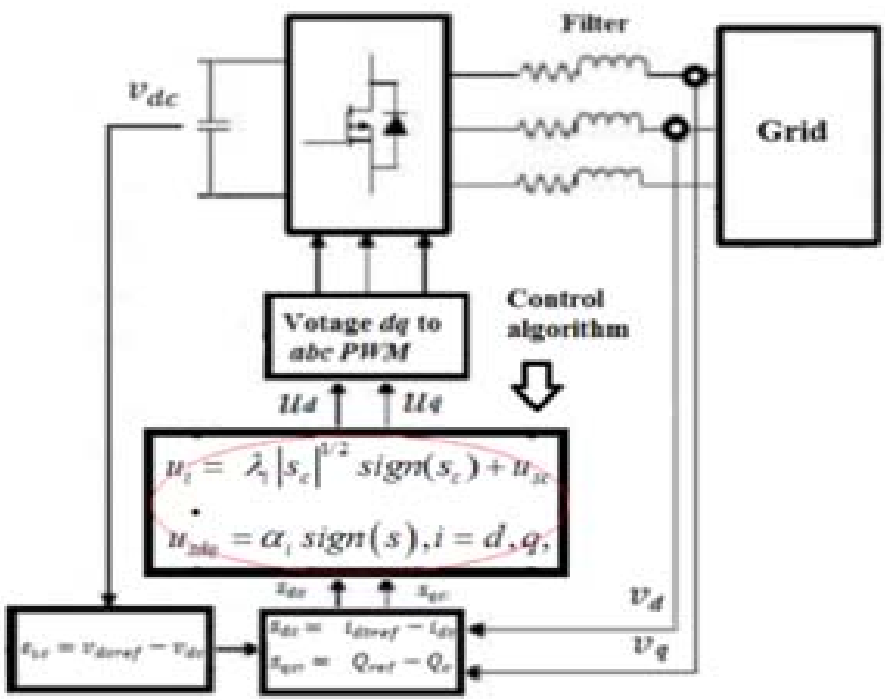

Figure 3. Inverter control schemes power grid side

8. Results of the simulation

This paper was done analyzing different electrical and mechanical machines, from the point of view of their dynamic models, which by simulating them, the behavior of these dynamic models must be very close to the real models, It is important to note that the parameters of the equipment must be the most accurate. The simulation of the electricity grid is considered to 120volts of CA and 60Hz. The simulation is performed in MathWorks® MATLAB® Simulink®. The results of the simulation are shown in the following; the Figure 4. Shows the tracking of the CD motor torque control, reference torque against the torque produced by the motor. Figure 5. shows the result of the turbine simulation, delivering a random speed vs speed of PMSG. Figure 8. and Figure 9. show the currents idq which are controlled by the BC and the ST algorithm and follow their respective reference even with constant perturbations.

In the Figure 6. is the controlled delivered reactive power to the mains which is keep it regulated to zero. The Figure 7. is id current delivered to the power grid brought to zero by the control. In Table 1. show the parameters used of simulation.

	Parameter PMSG	
Parameter	**Value**	**unit**
R_e Stator resistance	4.765	Ω
p Generator poles	4	
ψ_f Magnetization flow	0.1848	Wb
L_d Inductance in the d-axis	0.014	H
L_q Inductance in the 1-axis	0.014	H
B_g Coefficient of friction	0.0002	Nm/rad/s
J_g Inertia Equivalent	0.0001584	Kgm^2
	Parameter GRID-SIDE CONVERTER	
Parameter	**Value**	**unit**
R_c Cable resistance	0.36	Ω
ω_t Mains frequency	377	Rad/s
C_b Direct bus capacitor	2128	μF
C Filter capacitor	5	μF
L_c Filter Inductance	3.1	mH
	Parameter cd motor ¾ Hp	
Parameter	**Value**	**unit**
R_a Armature resistance	2.18	Ω
B_m Coefficient of friction	0.002	Nm/rad/s
K_m Motor constant	0.1848	
J_m Moment of inertia	0.0041	Kgm^2
L_a Field Inductance	23.1	mH
	Parameter turbine 300watts	
Parameter	**Value**	**unit**
R_t Turbine Radius	1	m
ρ_a is the density of the air	1.225	Kg/m^3
J_0 Moment of inertia	0.3	Kgm^2
B_0 Coefficient of friction	0.024	Nm/rad/s
C_p Constant of maximum power	0.2634	

Table 1. Parameters

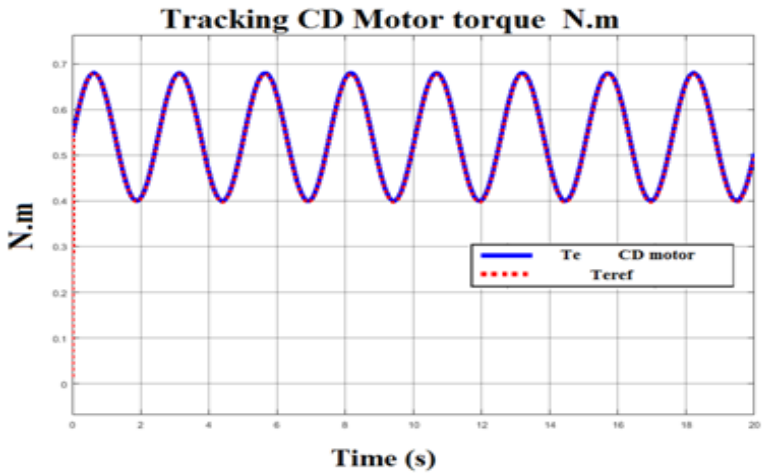

Figure 4. Tracking CD motor torque

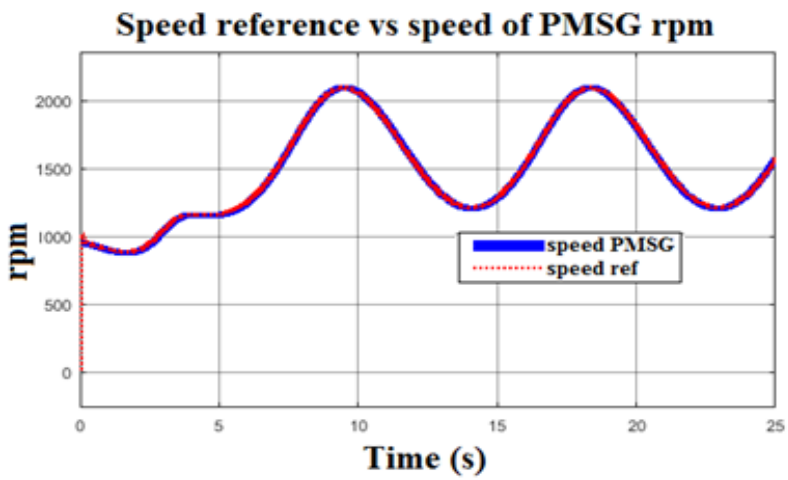

Figure 5. Speed of the turbine to PMSG vs Speed reference

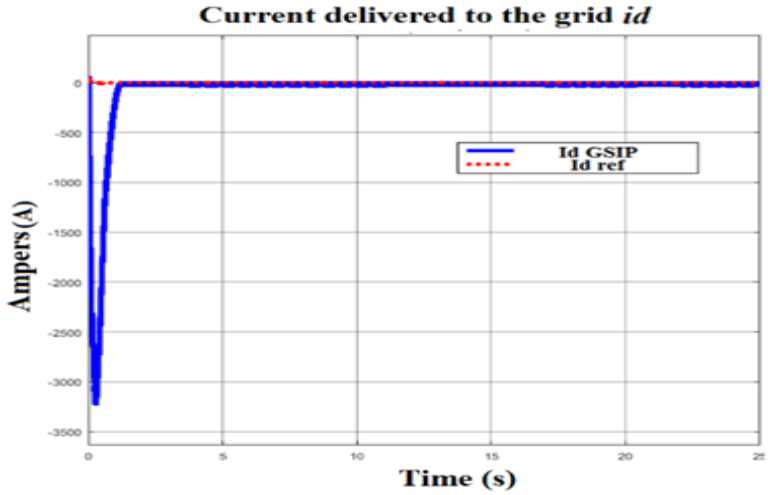

Figure 6. Current delivered to the grid *id*

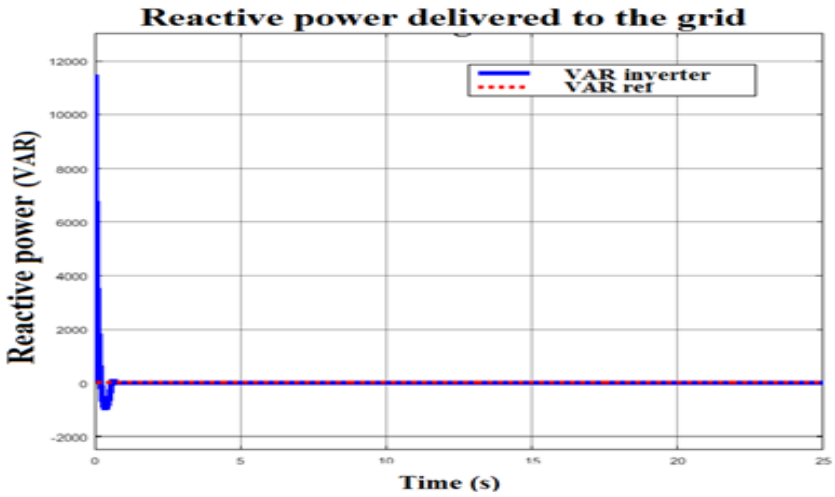

Figure 7. Reactive power delivered to the grid

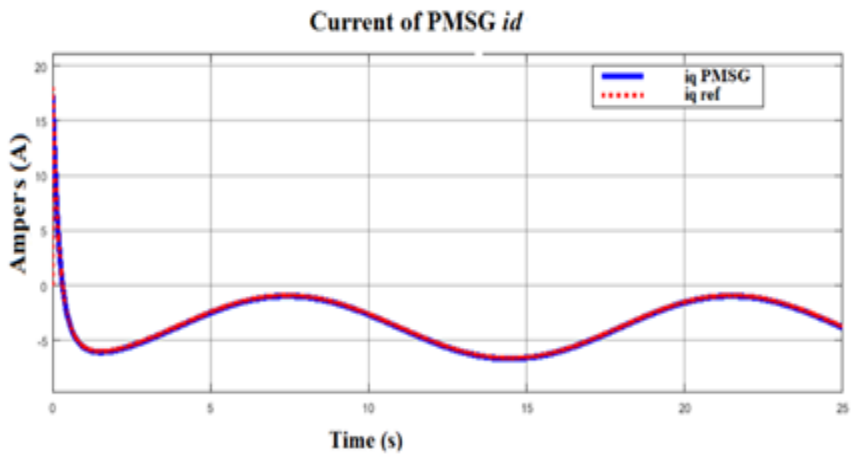

Figure 8. Current *iq*

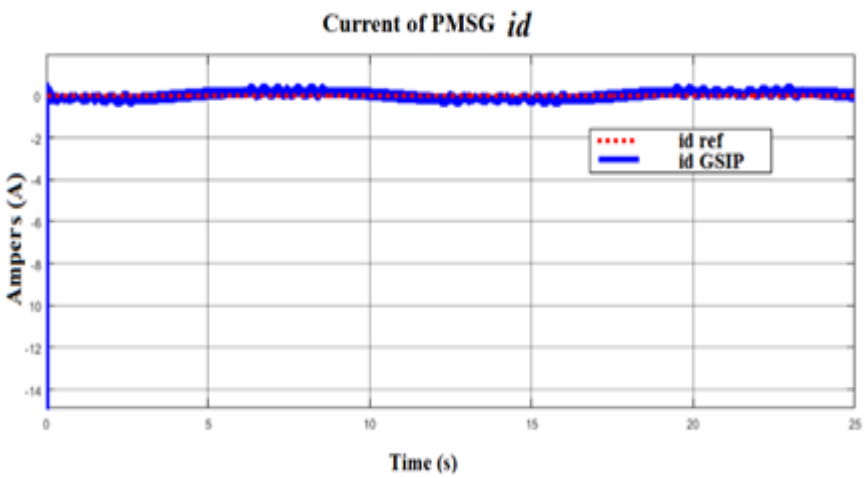

Figure 9. Current PMSG *id*

9. Conclusion

It simulates a complete wind turbine, PMSG, inverter and mains. It was demonstrated that the ST control has the capacity to maintain stable the power delivered to grid. Simulation in MathWorks® MATLAB® Simulink®. Dynamic models are a basic part because this is designed BC controllers. This paper is part of a series of research that, when implemented, has the capacity to optimize the extraction of renewable energies.

Future work is to implement the control designed in this article directly in a dSPACE, using three inverters, one for the CD motor and the following for the control of the PMSG and inverter side electric grid.

References

[1] Tahri, A., Hassaine, S., Moreau, S. A robust control for permanent magnet synchronous generator associated with variable speed wind turbine. *Journal of Electrical Engineering*, www.jee.ro.

[2] Rahelo, B., Hofmann, W., Gluck, M. (2004). Emulation of the Static and Dynamic Behaviour of a Wind-turbine with a DC-Machine drive, *In:* 35th Annual IEEE Power Electronics Specialists, Aackn, Germany.

[3] Kouadria, S., Belfedhal, S., Berkouk, E., Meslem, Y. (2013). Development of real time wind turbine emulator based on dc motor controlled by pi regulator, *In:* Eighth International Conference and exhibition on ecological vehicles and renewables energies,

[4] Morfin, O. A., Ruiz-Cruz, R., Loukianov, A. G., Saìnchez, E. N., Castellanos, M. I., Valenzuela, F. A. (2014). Torque controller of a doubly-fed induction generator impelled by a DC motor for wind system applications, Published in IET Renewable Power Generation, p. 484 - 497, 14 July

[5] Utkin, V., Guldner, J., Shi, J. (2009). Sliding Mode Control in Electro-Mechanical Systems, Second Edition, CRC Press.

[6] Sen, P.E.(1996). Principles of electric machines and power electronics., Kingston, Ontario, Canada.

[7] Rajaei, A., Mohamadian, M., Varjani, A. Y. (2013). Vienna-Rectifier-Based Direct Torque Control of PMSG for Wind Energy Application, *IEEE Transactions on Industrial Electronics*, 60. 2919-2029, p. 7, July.

[8] Hieu Phan, D., Huang, S. (2015). Super-Twisting Sliding Mode Control Design for Cascaded Control System of PMSG Wind Turbine, *Journal of Power Electronics*, 15 (5) 1358-1366, September.

[9] Babji Kumar, I. S., Bindu, S. (2016). "Direct control technique for PMSG based Variable speed Wind Applications, *In: International Conference on Electrical, Electronics, and Optimization Techniques* (ICEEOT), Manipal, India

[10] López Mesa, D. J., Camacho Muñoz , G. A., Díaz Chávez, J. O., Gaviria López, (C. A). (2009). Modulación pwm aplicada a inversores trifásicos dentro del esquema de accionamientos eléctricos AC, *Ingeniería e Investigación*, 29 (1).